CONTRACT PLANS

FOR THE CONSTRUCTION OF:

CRP No. 9221-04
Statler Bridge Replacement

Salmon Creek Rd. over Salmon Creek

July 2019

OKANOGAN COUNTY
DEPARTMENT OF PUBLIC WORKS
1234-A Second Avenue South, Okanogan WA 98840

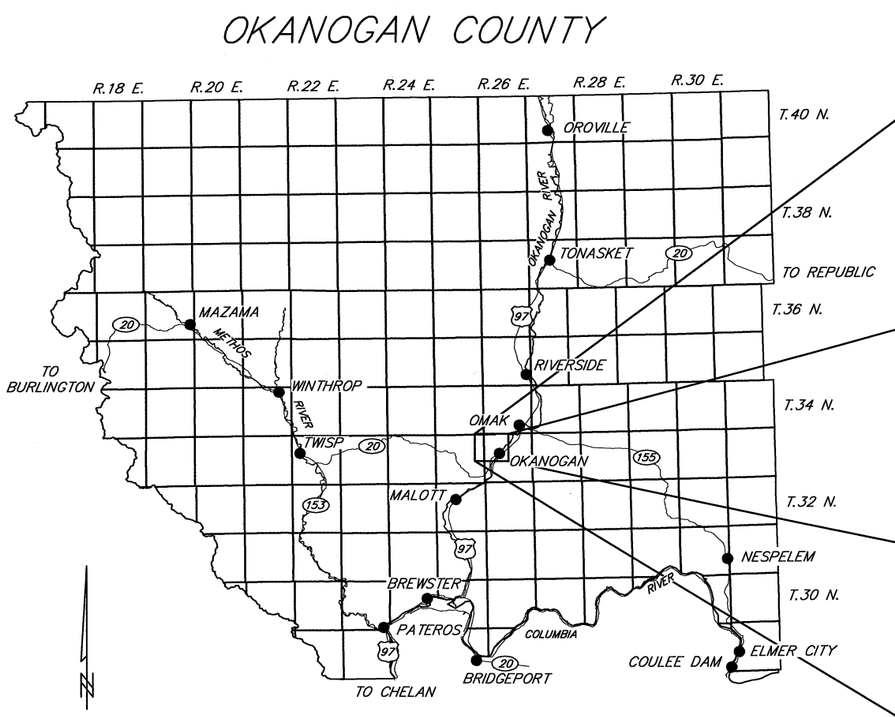

LOCATION MAP

NOT TO SCALE

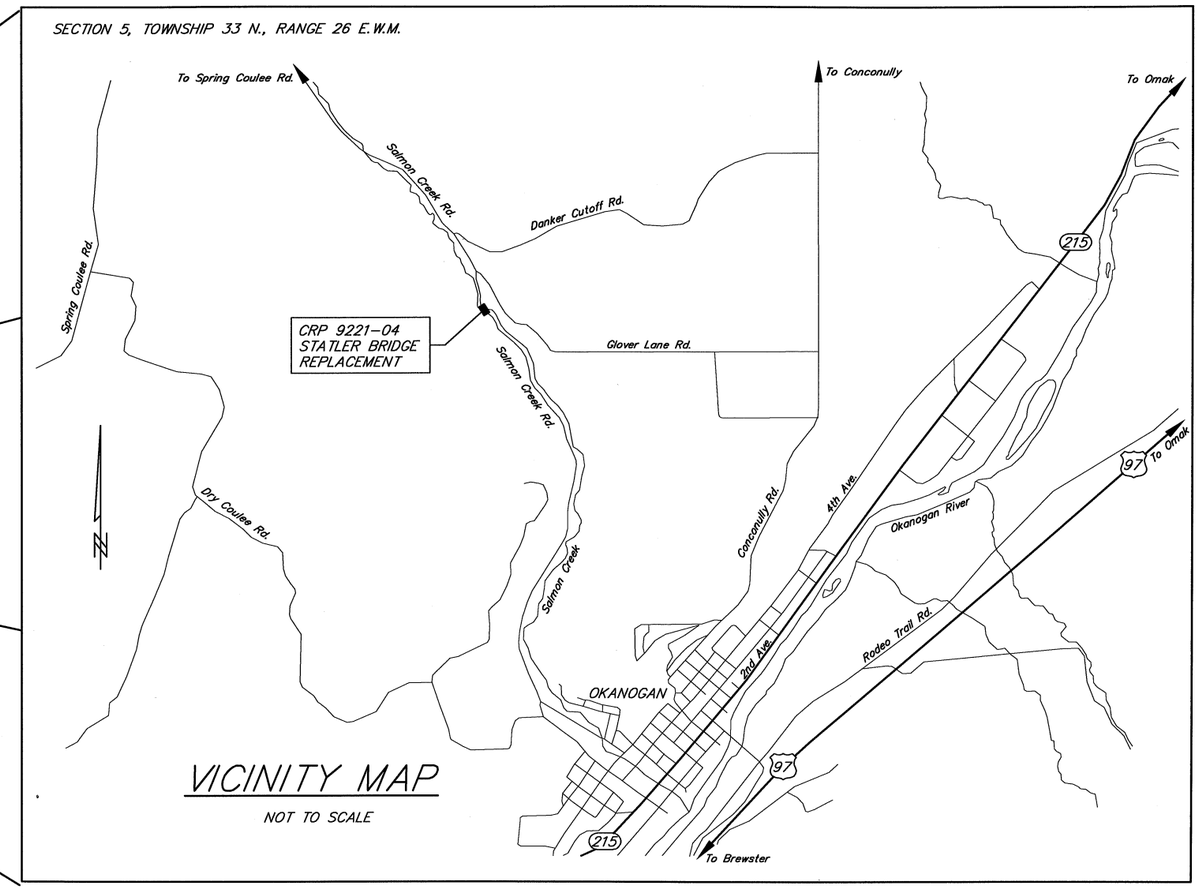

VICINITY MAP

NOT TO SCALE

SHEET INDEX

COVER SHEET 1
VICINITY, LOCATION MAP & SHEET INDEX 2
SUMMARY OF QUANTITIES 3
ROADWAY PLAN & PROFILE 4
RIGHT OF WAY CONTROL PLAN 5
BRIDGE LAYOUT 6
SECTIONS & GENERAL NOTES 7
ABUTMENT 1 DETAILS 8
ABUTMENT 2 DETAILS 9
FOOTING LAYOUT & SE WINGWALL 10
SW, NW & NE WINGWALL DETAILS 11
MISC. ABUTMENT DETAILS 12
DECK PLAN & GIRDER DETAILS 13
GIRDER REINFORCING & DETAILS 14
DIAPHRAGM DETAILS 15
GUARDRAIL & SHLD. LAYOUT, RAILING NOTES 16
RAILING DETAILS 1 17
RAILING DETAILS 2 18
RETAINING WALL DETAILS 19
CHANNEL PROTECTION DETAILS 20
BAR LIST 21
TRAFFIC CONTROL PLAN 22

Designed by: SMK	Date: 1/19
Drawn by: AVK	Date: 1/19
Checked by: SMK	Date: 2/19
Fed. Funct. Class: Minor Collector	
Terrain Type: Mountainous	
Design Year: 2019	
Design Year ADT.: 497	
Design Speed: 30	

Nicholls Kovich Engineering, PLLC
P.O. Box 1050 Veradale WA 99037-1050
Phone: (509) 921-6747 Fax: (509) 242-8777
E-mail: info@nichollskovich.com

R.A.P. Project No. 2418-01

Approved: _____ Approval Date

Okanogan County
Department of Public Works
1234-A 2nd Ave. S. 509-422-7300
Okanogan, Washington 98840

COUNTY ROAD PROJECT NO. 9221-04

VICINITY, LOCATION MAP & SHEET INDEX

STATLER BRIDGE REPLACEMENT

SUMMARY OF ESTIMATED QUANTITIES

ITEM NO.	STANDARD ITEM NO.	ESTIMATED QUANTITY	UNIT	ITEM DESCRIPTION
				PREPARATION
1	0001	1	L.S.	MOBILIZATION
2	0035	1	L.S.	CLEARING AND GRUBBING
3	0071	1	L.S.	REMOVING EXISTING BRIDGE
				GRADING
4	0310	3270	C.Y.	ROADWAY EXCAVATION INCL. HAUL
5	0470	352	C.Y.	EMBANKMENT COMPACTION
				DRAINAGE
6	1030	8	C.Y.	DITCH EXCAVATION INCL. HAUL
7	1040	1320	C.Y.	CHANNEL EXCAVATION INCL. HAUL
8	1069	66	C.Y.	FILTER BLANKET
9	1076	505	C.Y.	HEAVY LOOSE RIPRAP
10	1085	8	C.Y.	QUARRY SPALLS
				STRUCTURE
11	4006	675	C.Y.	STRUCTURAL EXCAVATION CLASS A INCL. HAUL
12	4013	1	L.S.	SHORING OR EXTRA EXCAVATION CL. A
13	4025	57	C.Y.	GRAVEL BACKFILL FOR WALL
14	4149	21411	LB.	ST. REINF. BAR FOR BRIDGE
15	4300	1	L.S.	SUPERSTRUCTURE – STATLER BRIDGE
16	4322	162	C.Y.	CONC. CLASS 4000 FOR BRIDGE
				SURFACING
17	5100	880	TON	CRUSHED SURFACING BASE COURSE
				HOT MIX ASPHALT
18	5767	355	TON	HMA CL. 1/2 IN. PG 64–28
				EROSION CONTROL AND PLANTING
19	6403	25	DAY	ESC LEAD
20	6414	0.4	ACRES	SEEDING, FERTILIZING, AND MULCHING
21	6490	1	EST.	EROSION/WATER POLLUTION CONTROL

ITEM NO.	STANDARD ITEM NO.	ESTIMATED QUANTITY	UNIT	ITEM DESCRIPTION
				TRAFFIC
22	6719	2	EACH	BEAM GUARDRAIL TYPE 31 NON–FLARED TERMINAL
23	6727	100	L.F.	EXTRUDED CURB
24	6757	63	L.F.	BEAM GUARDRAIL TYPE 31
25	6759	19	L.F.	BEAM GUARDRAIL TYPE 10
26	6760	3	EACH	BEAM GUARDRAIL TRANSITION SECTION TYPE 24
27	6766	2	EACH	BEAM GUARDRAIL ANCHOR TYPE 10
28	6806	950	L.F.	PAINT LINE
29	6971	1	L.S.	PROJECT TEMPORARY TRAFFIC CONTROL
				OTHER ITEMS
30		1	L.S.	STREAM DIVERSION AND DEWATERING
31		1	L.S.	SUPERELEVATION MODIFICATION AT PROJECT ENDS
32	7018	300	mGal	WATER
33	7037	1	L.S.	STRUCTURE SURVEYING
34	7164	115	S.F.	GRAVITY BLOCK WALL
35		430	S.F.	MODULAR BLOCK RETAINING WALL
36		3	EACH	REMOVE AND RESET SIGN
37	7490	1	L.S.	TRIMMING AND CLEANUP
38	7535	38	S.Y.	CONSTRUCTION GEOTEXTILE FOR DITCH LINING
39	7552	425	S.Y.	CONSTRUCTION GEOTEXTILE FOR SOIL STABILIZATION
40	7725	1	EST.	REIMBURSEMENT FOR THIRD PARTY DAMAGE
41	7728	–1.00	CALC	MINOR CHANGE
42	7736	1	L.S.	SPCC PLAN

Nicholls Kovich Engineering, PLLC
P.O. Box 1050 Veradale WA 99037-1050
Phone: (509) 921-6747 Fax: (509) 242-8777
E-mail: info@nichollskovich.com

R.A.P. Project No. 2418–01

Approved: _____ Approval Date

Okanogan County Department of Public Works
1234–A 2nd Ave. S. 509–422–7300
Okanogan, Washington 98840

COUNTY ROAD PROJECT NO. 9221–04

SUMMARY OF QUANTITIES

STATLER BRIDGE REPLACEMENT

SECTION 5, TOWNSHIP 33 N., RANGE 26 E.W.M.
OKANOGAN COUNTY

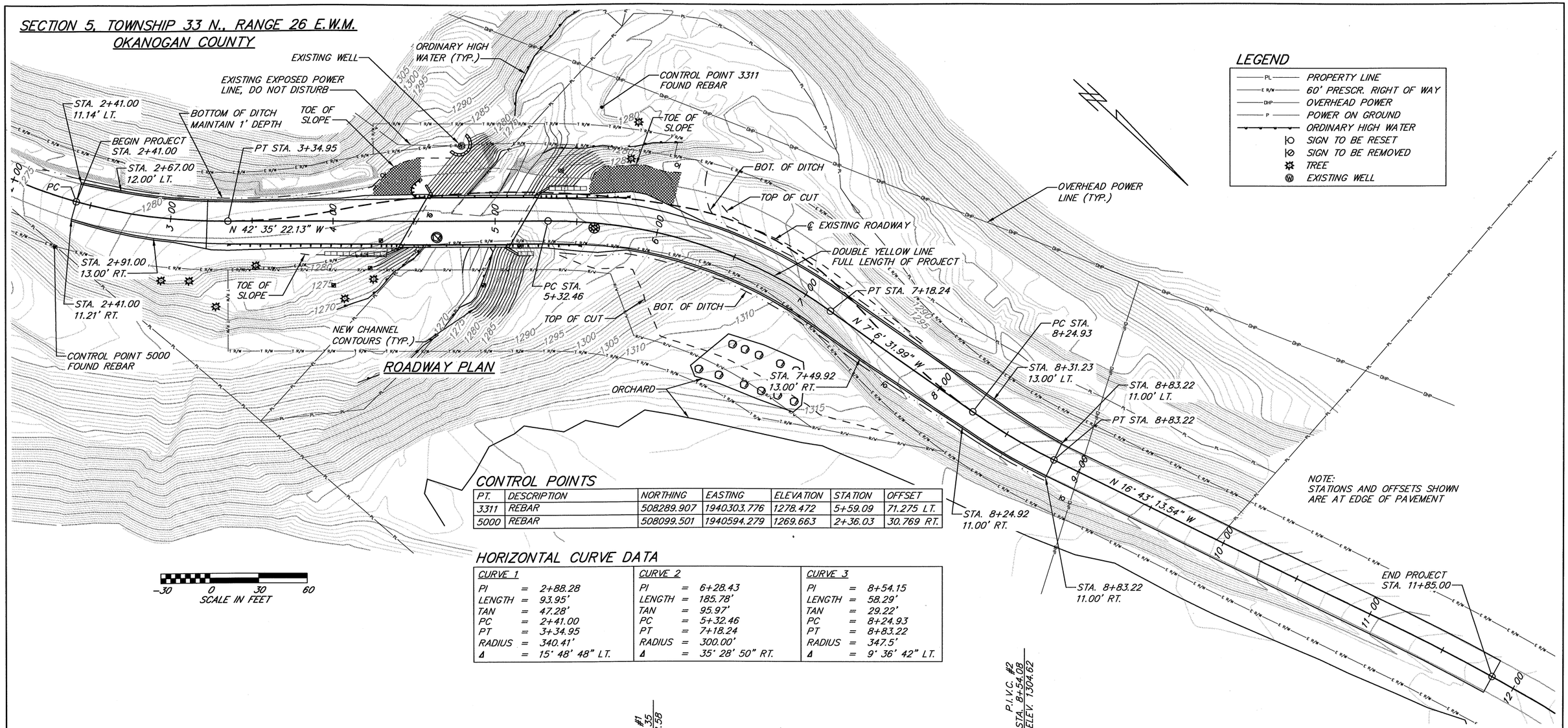

LEGEND

PL	PROPERTY LINE
E R/W	60' PRESCR. RIGHT OF WAY
OHP	OVERHEAD POWER
P	POWER ON GROUND
	ORDINARY HIGH WATER
	SIGN TO BE RESET
	SIGN TO BE REMOVED
	TREE
	EXISTING WELL

NOTE:
STATIONS AND OFFSETS SHOWN ARE AT EDGE OF PAVEMENT

CONTROL POINTS

PT.	DESCRIPTION	NORTHING	EASTING	ELEVATION	STATION	OFFSET
3311	REBAR	508289.907	1940303.776	1278.472	5+59.09	71.275 LT.
5000	REBAR	508099.501	1940594.279	1269.663	2+36.03	30.769 RT.

HORIZONTAL CURVE DATA

CURVE 1		CURVE 2		CURVE 3	
PI	= 2+88.28	PI	= 6+28.43	PI	= 8+54.15
LENGTH	= 93.95'	LENGTH	= 185.78'	LENGTH	= 58.29'
TAN	= 47.28'	TAN	= 95.97'	TAN	= 29.22'
PC	= 2+41.00	PC	= 5+32.46	PC	= 8+24.93
PT	= 3+34.95	PT	= 7+18.24	PT	= 8+83.22
RADIUS	= 340.41'	RADIUS	= 300.00'	RADIUS	= 347.5'
Δ	= 15° 48' 48" LT.	Δ	= 35° 28' 50" RT.	Δ	= 9° 36' 42" LT.

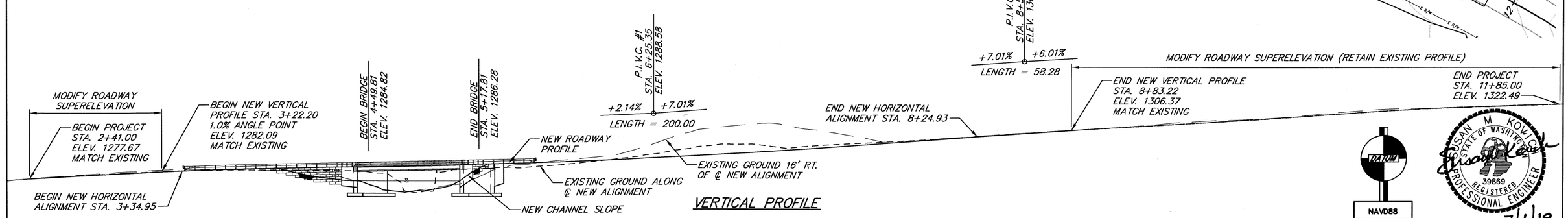

VERTICAL PROFILE

NAVD88

SUSAN M. KOVICH
STATE OF WASHINGTON
39869
REGISTERED PROFESSIONAL ENGINEER
7/1/19

Designed by: SMK	Date: 1/19
Drawn by: AVK	Date: 1/19
Checked by: SMK	Date: 2/19
Fed. Funct. Class: Minor Collector	
Terrain Type: Mountainous	
Design Year: 2019	
Design Year ADT.: 497	
Design Speed: 30	

Nicholls Kovich Engineering, PLLC
P.O. Box 1050 Veradale WA 99037-1050
Phone: (509) 921-6747 Fax: (509) 242-8777
E-mail: info@nichollskovich.com

R.A.P. Project No. 2418-01

Approved: _____ Approval Date

Okanogan County
Department of Public Works
1234-A 2nd Ave. S. 509-422-7300
Okanogan, Washington 98840

COUNTY ROAD PROJECT NO. 9221-04

ROADWAY PLAN & PROFILE

STATLER BRIDGE REPLACEMENT

SECTION 5, TOWNSHIP 33 N., RANGE 26 E.W.M.
OKANOGAN COUNTY

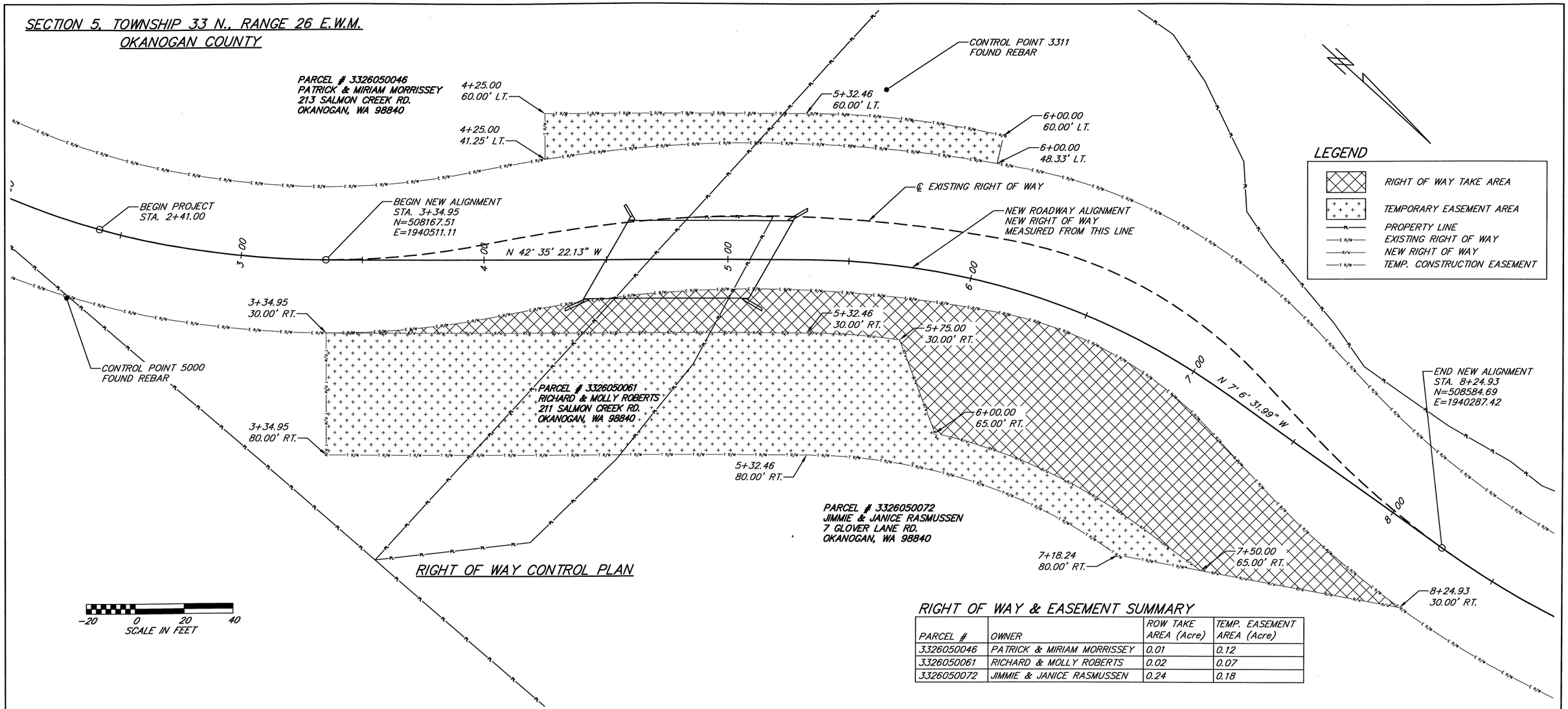

RIGHT OF WAY CONTROL PLAN

RIGHT OF WAY & EASEMENT SUMMARY

PARCEL #	OWNER	ROW TAKE AREA (Acre)	TEMP. EASEMENT AREA (Acre)
3326050046	PATRICK & MIRIAM MORRISSEY	0.01	0.12
3326050061	RICHARD & MOLLY ROBERTS	0.02	0.07
3326050072	JIMMIE & JANICE RASMUSSEN	0.24	0.18

Designed by: SMK Date: 4/19
Drawn by: AVK Date: 4/19
Checked by: SMK Date: 5/19
Fed. Funct. Class: Minor Collector
Terrain Type: Mountainous
Design Year: 2019
Design Year ADT.: 497
Design Speed: 30

Nicholls Kovich Engineering, PLLC
P.O. Box 1050 Veradale WA 99037-1050
Phone: (509) 921-6747 Fax: (509) 242-8777
E-mail: info@nichollskovich.com

R.A.P. Project No. 2418-01

Approved: _____ Approval Date

Okanogan County
Department of Public Works
1234-A 2nd Ave. S. 509-422-7300
Okanogan, Washington 98840

COUNTY ROAD PROJECT NO. 9221-04

RIGHT OF WAY CONTROL PLAN

STATLER BRIDGE REPLACEMENT

SECTION 5, TOWNSHIP 33 N., RANGE 26 E.W.M.
OKANOGAN COUNTY

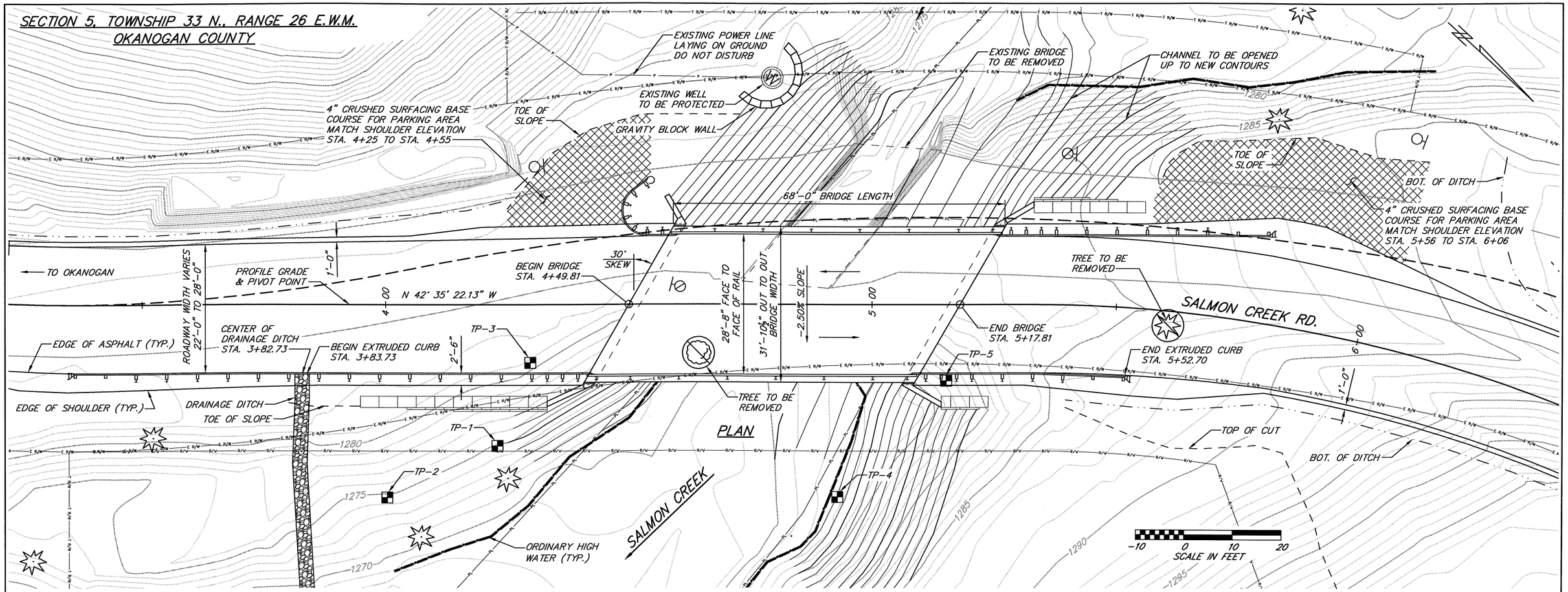

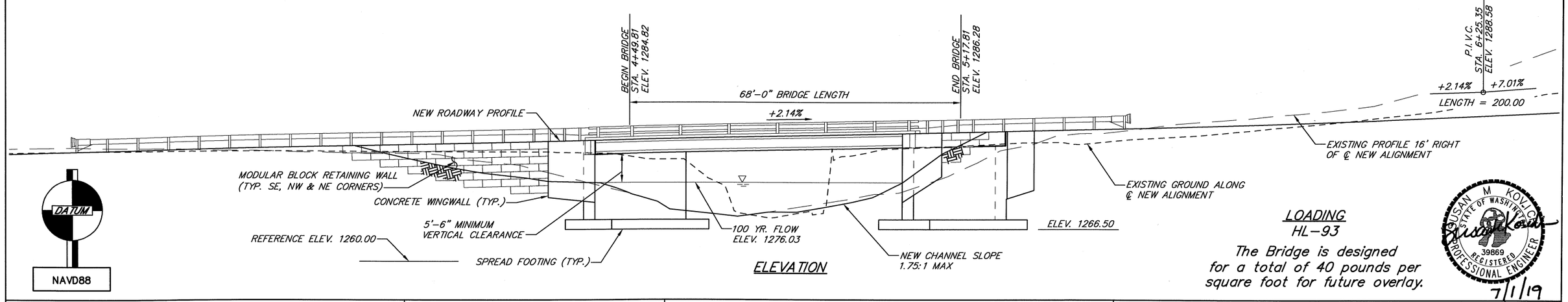

LOADING
HL-93

The Bridge is designed for a total of 40 pounds per square foot for future overlay.

SUSAN M KOVICH STATE OF WASHINGTON 39869 REGISTERED PROFESSIONAL ENGINEER
7/1/19

Designed by: SMK	Date: 1/19
Drawn by: AVK	Date: 1/19
Checked by: SMK	Date: 2/19
Fed. Funct. Class: Minor Collector	
Terrain Type: Mountainous	
Design Year: 2019	
Design Year ADT.: 497	
Design Speed: 30	

Nicholls Kovich Engineering, PLLC
P.O. Box 1050 Veradale WA 99037-1050
Phone: (509) 921-6747 Fax: (509) 242-8777
E-mail: info@nichollskovich.com

R.A.P. Project No. 2418-01

Approved: _____ Approval Date

Okanogan County Department of Public Works
1234-A 2nd Ave. S. 509-422-7300
Okanogan, Washington 98840

COUNTY ROAD PROJECT NO. 9221-04

BRIDGE LAYOUT

STATLER BRIDGE REPLACEMENT

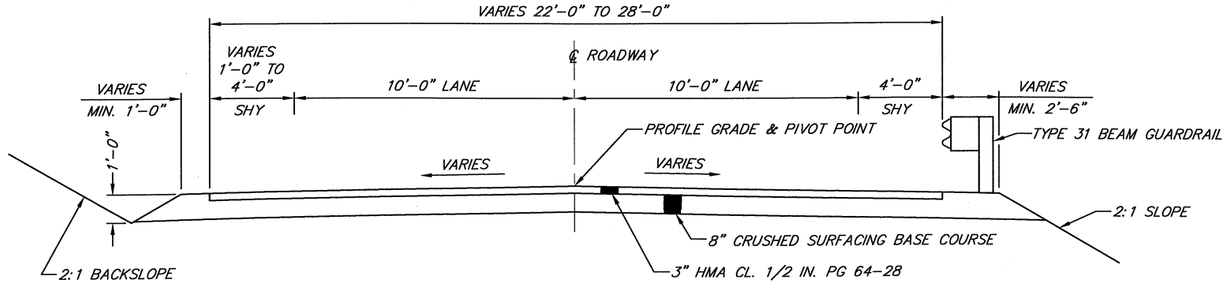

TYPICAL ROADWAY SECTION

STA. 3+34.95 TO STA. 8+83.22

GENERAL NOTES

1. ALL MATERIALS AND WORKMANSHIP SHALL BE IN ACCORDANCE WITH THE REQUIREMENTS OF THE STATE OF WASHINGTON, DEPARTMENT OF TRANSPORTATION, STANDARD SPECIFICATIONS FOR ROAD, BRIDGE, AND MUNICIPAL CONSTRUCTION, DATED 2018, AND AMENDMENTS (STD. SPEC.)
2. THIS STRUCTURE HAS BEEN DESIGNED IN ACCORDANCE WITH THE REQUIREMENTS OF THE 8TH EDITION AASHTO "LRFD BRIDGE DESIGN SPECIFICATIONS," DATED 2017.
3. CAST-IN-PLACE CONCRETE SHALL BE CLASS 4000 MIX.
4. FOR PRESTRESSED CONCRETE GIRDER REQUIREMENTS, SEE NOTES ON GIRDER SHEETS.
5. UNLESS OTHERWISE SHOWN ON THE PLANS, CONCRETE COVER SHALL BE MEASURED FROM THE FACE OF CONCRETE TO THE FACE OF ANY REINFORCING BAR. COVER SHALL BE 3" AT BOTTOM OF FOOTING, 2½" AT THE TOP OF THE ROADWAY SLAB, 2" AT FACE OF CONCRETE EXPOSED TO EARTH, 1" AT THE BOTTOM OF THE ROADWAY SLAB, AND 1½" AT ALL OTHER LOCATIONS.
6. MODULAR BLOCK RETAINING WALLS & GRAVITY BLOCK WALL SHOWN ARE FOR REFERENCE ONLY. THEY SHALL BE DESIGNED BY OTHERS. SEE SPECIAL PROVISIONS FOR PERFORMANCE REQUIREMENTS. PLANS SHALL BE SUBMITTED TO DESIGN ENGINEER FOR APPROVAL PRIOR TO INSTALLATION BY CONTRACTOR.
7. PRIOR TO PLACEMENT OF FOOTING PADS, SUBGRADES FOR ALL FOOTINGS SHALL BE EVALUATED BY THE GEOTECHNICAL ENGINEER.
8. CREEK FLOW IS EXPECTED TO REMAIN AT 8 CFS THROUGH THE SUMMER OF 2019. CONTRACTOR WILL NEED TO PROVIDE A DIVERSION AND/OR TEMPORARY CULVERT THAT WILL PASS THAT FLOW (SEE SPECIAL PROVISIONS).

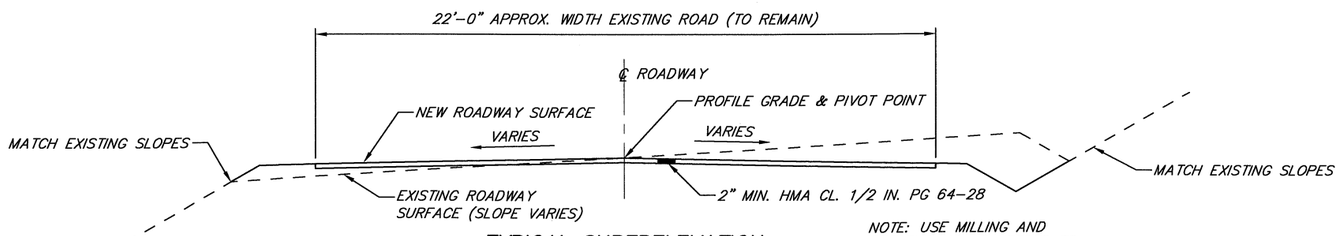

NOTE: USE MILLING AND PRELEVELING AS NEEDED TO ACHIEVE NEW SUPERELEVATION

TYPICAL SUPERELEVATION MODIFICATION AT PROJECT ENDS

STA. 2+41.00 TO STA. 3+34.95
STA. 8+83.22 TO STA. 11+85.00

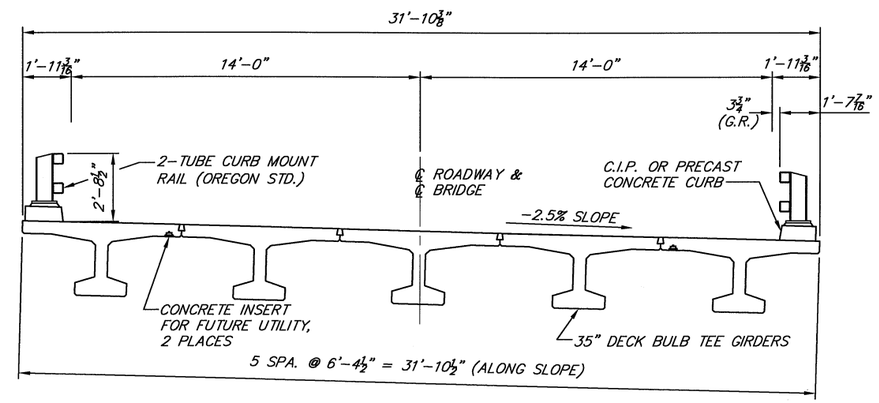

TYPICAL BRIDGE SECTION

LOOKING AHEAD ON STATIONING

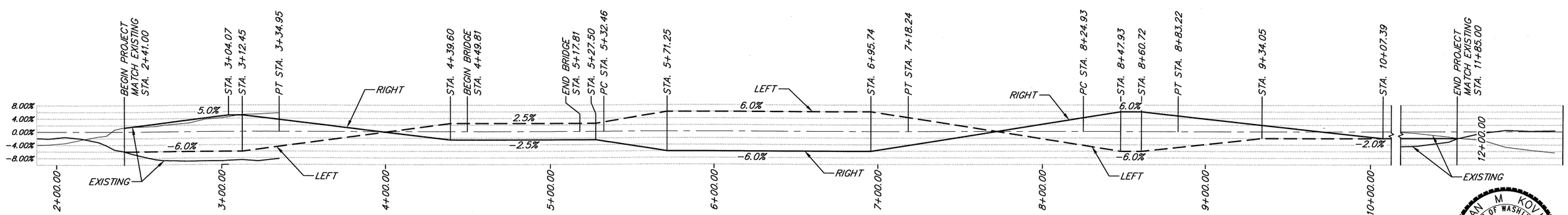

SUPERELEVATION TRANSITION

SUSAN M KOVICH
STATE OF WASHINGTON
39869
REGISTERED PROFESSIONAL ENGINEER
7/1/19

Designed by: SMK	Date: 1/19
Drawn by: AVK	Date: 1/19
Checked by: SMK	Date: 2/19
Fed. Funct. Class: Minor Collector	
Terrain Type: Mountainous	
Design Year: 2019	
Design Year ADT.: 497	
Design Speed: 30	

Nicholls Kovich Engineering, PLLC
P.O. Box 1050 Veradale WA 99037-1050
Phone: (509) 921-6747 Fax: (509) 242-8777
E-mail: info@nichollskovich.com

R.A.P. Project No. 2418-01

Approved: _____ Approval Date

Okanogan County Department of Public Works
1234-A 2nd Ave. S. 509-422-7300
Okanogan, Washington 98840

COUNTY ROAD PROJECT NO. 9221-04

SECTIONS & GENERAL NOTES

STATLER BRIDGE REPLACEMENT

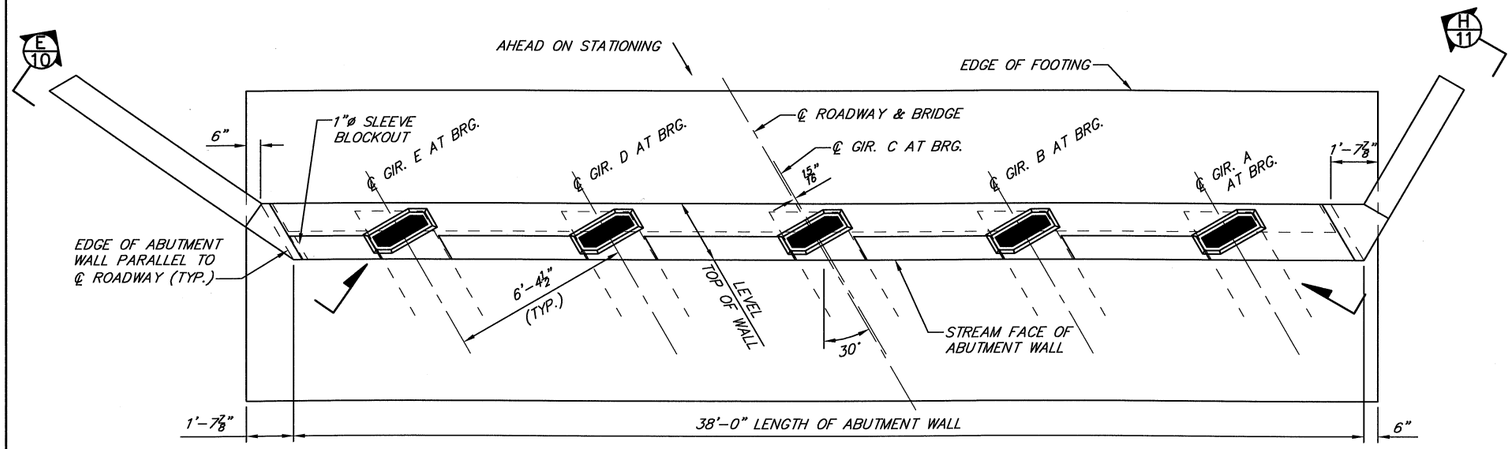

ABUTMENT 1 PLAN

NOTE: TOP OF ABUTMENT CAP LEVEL LONGITUDINALLY

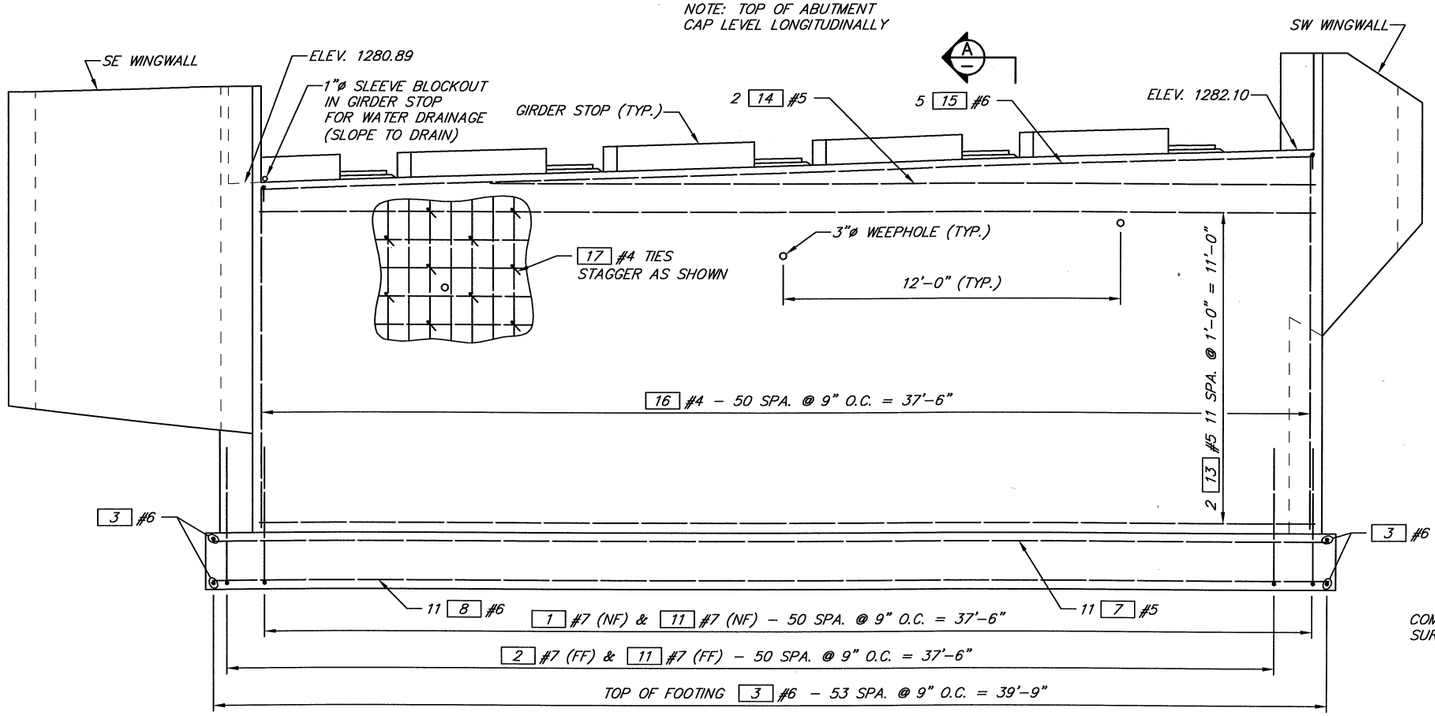

NF = NEAR FACE
FF = FAR FACE

ABUTMENT 1 ELEVATION

LOOKING BACK ON STATIONING
TOP OF WALL ELEVATIONS SHOWN ARE ALONG ℄ BRG.

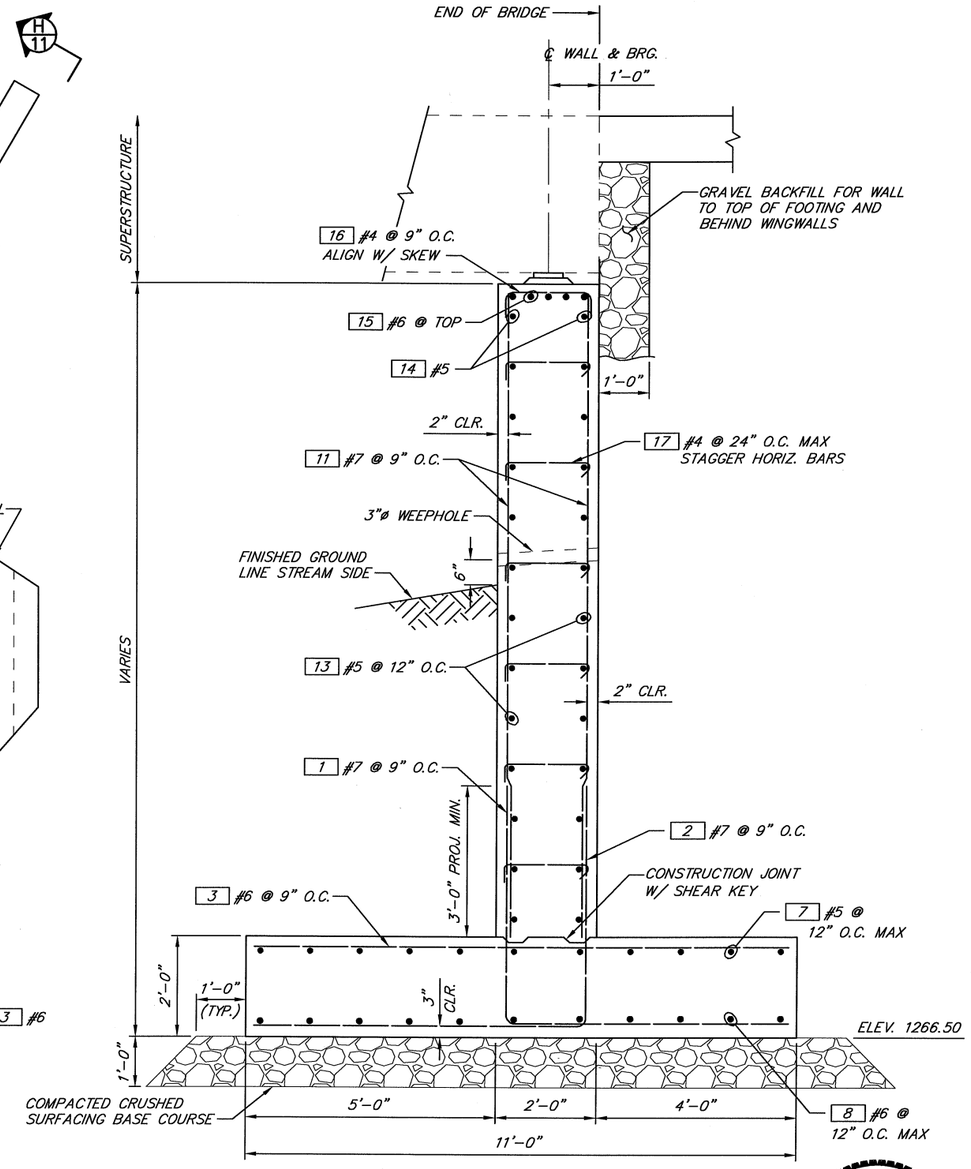

SECTION A

LOOKING ALONG SKEW

SUSAN M KOVICH
STATE OF WASHINGTON
39869
REGISTERED PROFESSIONAL ENGINEER
7/1/19

Designed by: SMK	Date: 4/19
Drawn by: AVK	Date: 4/19
Checked by: SMK	Date: 5/19
Fed. Funct. Class: Minor Collector	
Terrain Type: Mountainous	
Design Year: 2019	
Design Year ADT.: 497	
Design Speed: 30	

Nicholls Kovich Engineering, PLLC
P.O. Box 1050 Veradale WA 99037-1050
Phone: (509) 921-6747 Fax: (509) 242-8777
E-mail: info@nichollskovich.com

R.A.P. Project No. 2418–01

Approved: _____ Approval Date

Okanogan County Department of Public Works
1234–A 2nd Ave. S. 509–422–7300
Okanogan, Washington 98840

COUNTY ROAD PROJECT NO. 9221–04

ABUTMENT 1 DETAILS

STATLER BRIDGE REPLACEMENT

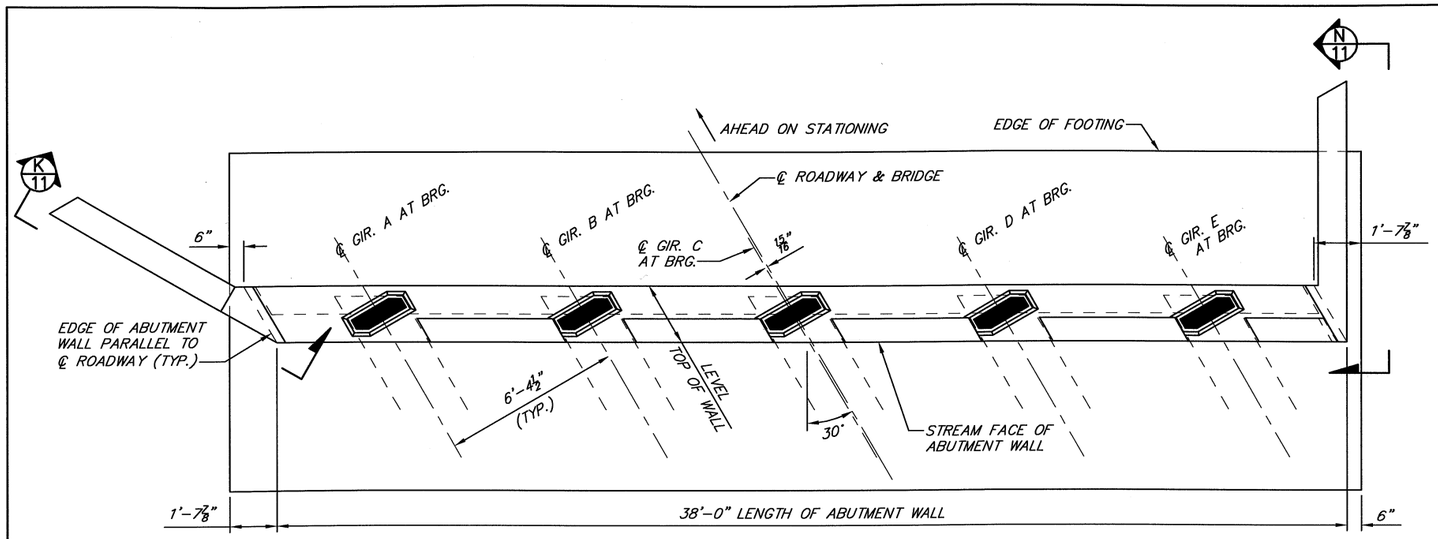

ABUTMENT 2 PLAN

NOTE: TOP OF ABUTMENT CAP LEVEL LONGITUDINALLY

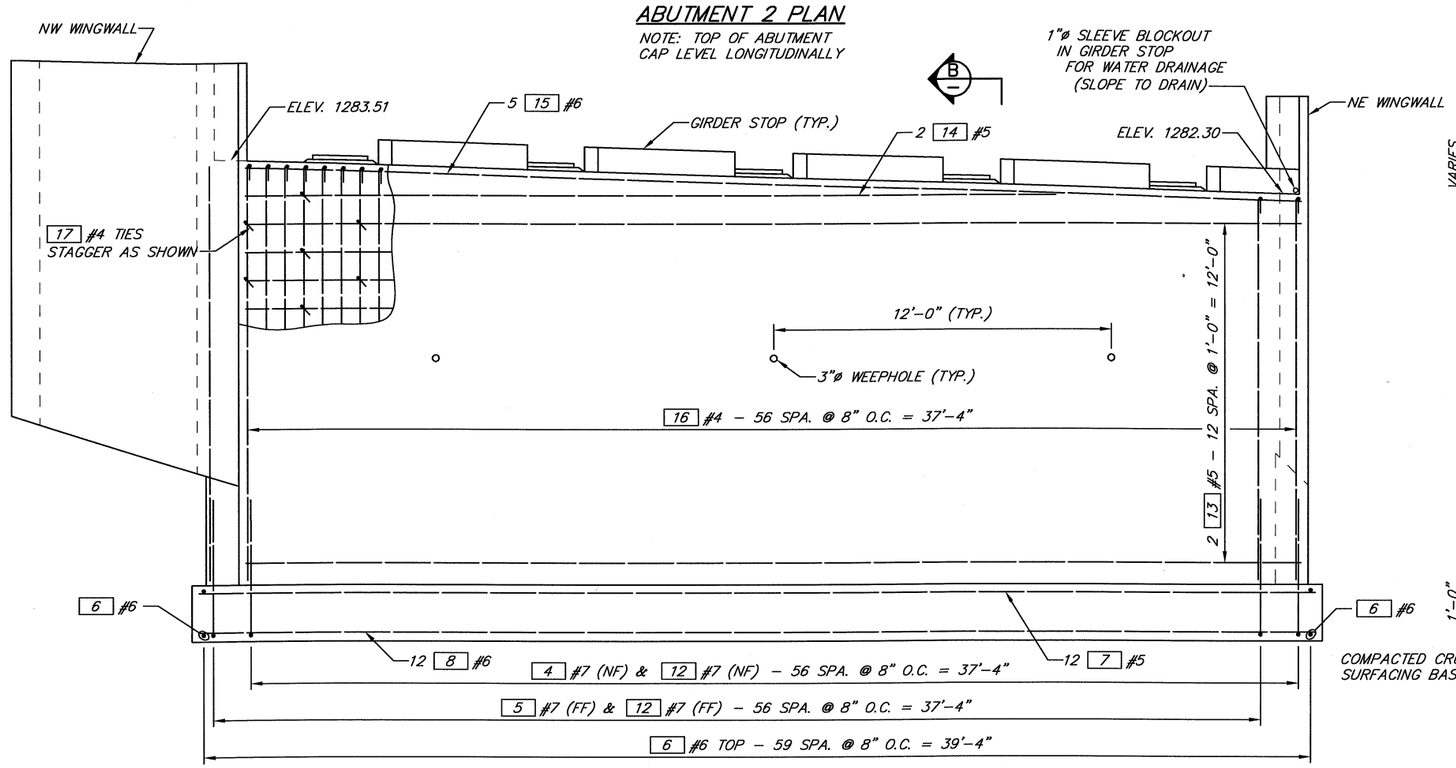

NF = NEAR FACE
FF = FAR FACE

ABUTMENT 2 ELEVATION

LOOKING AHEAD ON STATIONING
TOP OF WALL ELEVATIONS SHOWN ARE ALONG ℄ BRG.

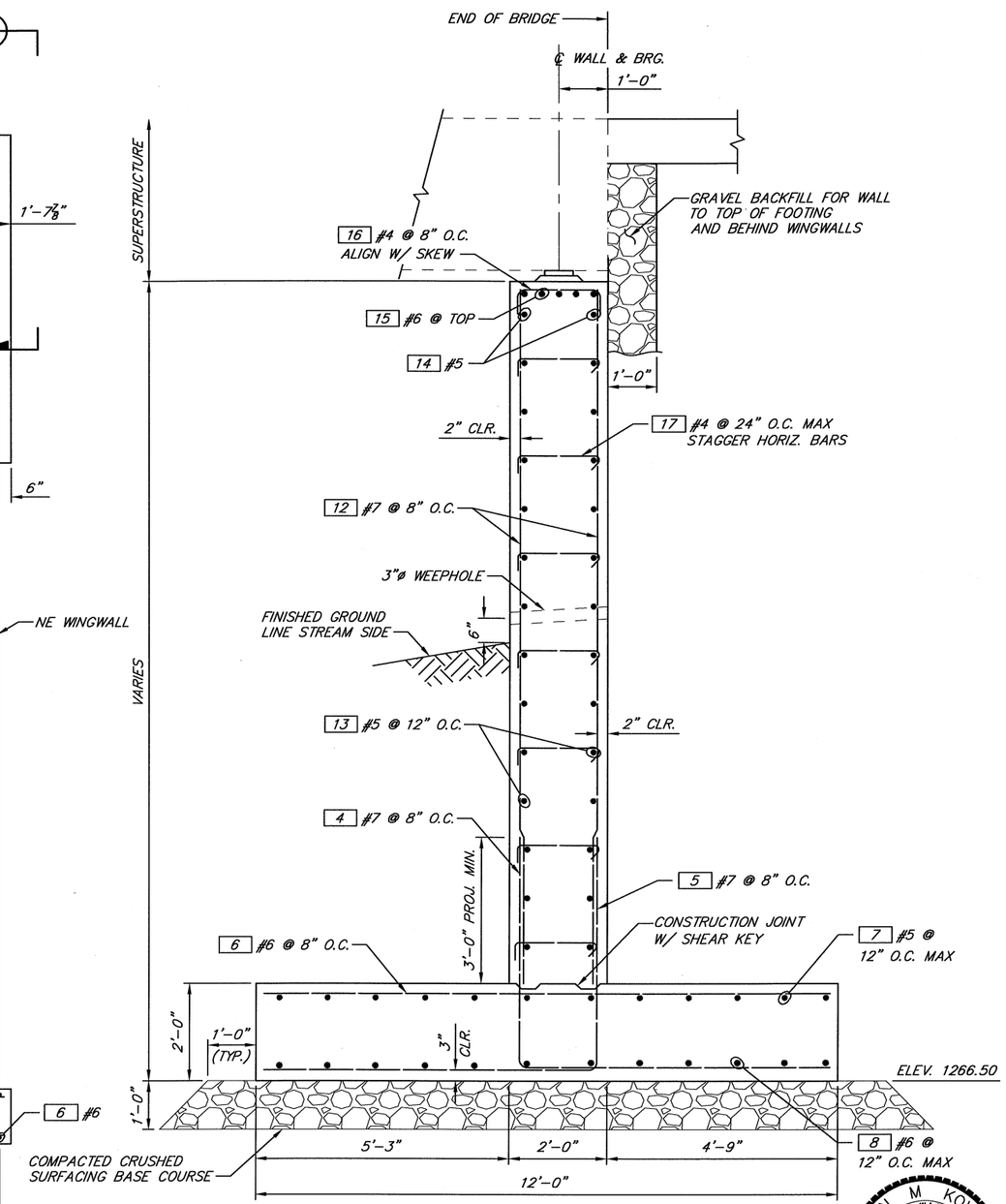

SECTION B

LOOKING ALONG SKEW

SUSAN M KOVICH
STATE OF WASHINGTON
39869
REGISTERED PROFESSIONAL ENGINEER
7/1/19

Designed by: SMK	Date: 4/19
Drawn by: AVK	Date: 4/19
Checked by: SMK	Date: 5/19
Fed. Funct. Class: Minor Collector	
Terrain Type: Mountainous	
Design Year: 2019	
Design Year ADT.: 497	
Design Speed: 30	

Nicholls Kovich Engineering, PLLC
P.O. Box 1050 Veradale WA 99037-1050
Phone: (509) 921-6747 Fax: (509) 242-8777
E-mail: info@nichollskovich.com

R.A.P. Project No. 2418-01

Approved: _____ Approval Date

Okanogan County Department of Public Works
1234-A 2nd Ave. S. 509-422-7300
Okanogan, Washington 98840

COUNTY ROAD PROJECT NO. 9221-04

ABUTMENT 2 DETAILS

STATLER BRIDGE REPLACEMENT

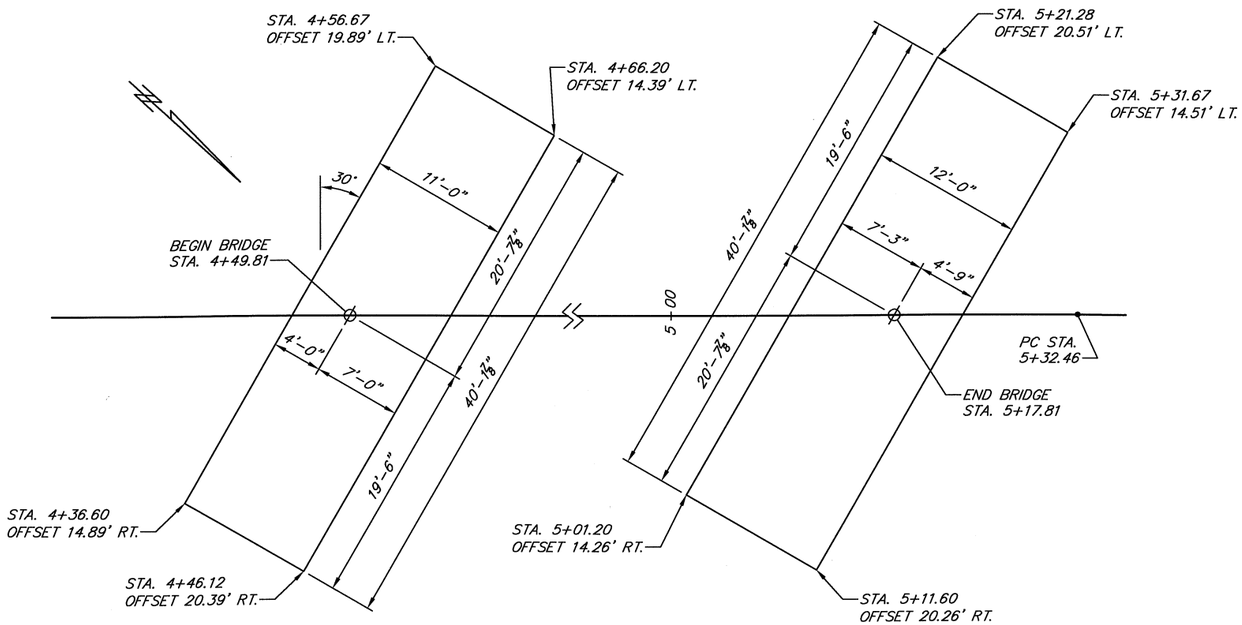

FOOTING LAYOUT

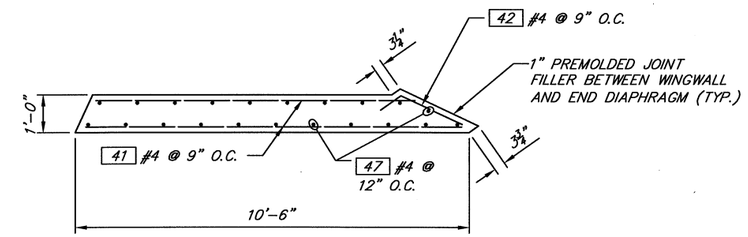

SECTION C

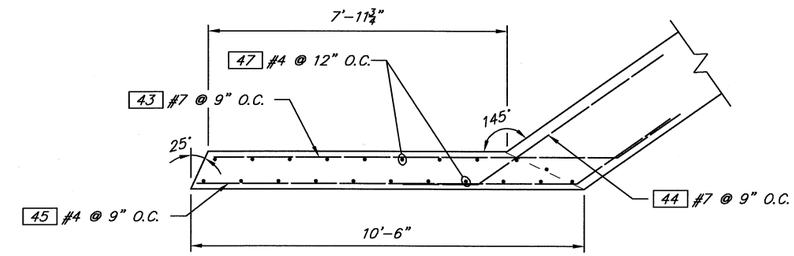

SECTION D

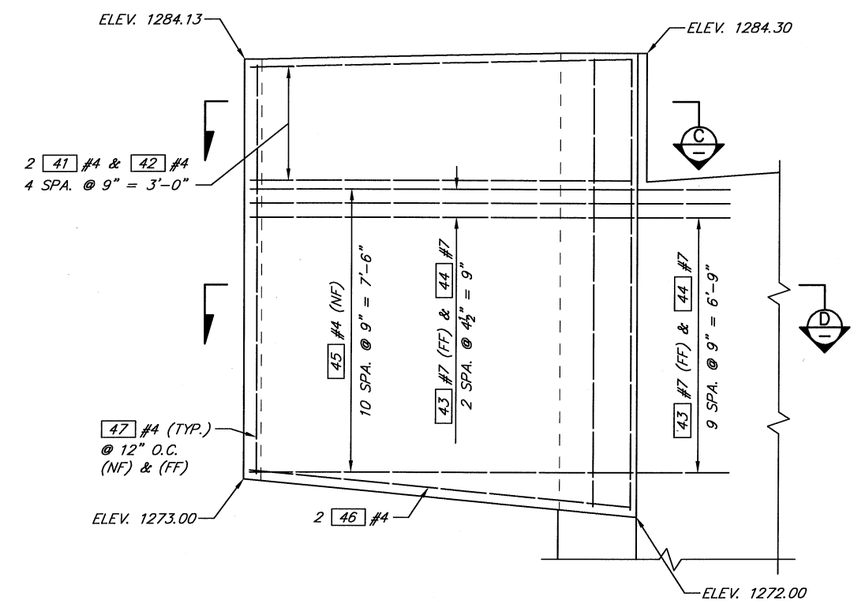

SECTION E
SOUTHEAST WINGWALL

SUSAN M KOVICH
STATE OF WASHINGTON
39869
REGISTERED
PROFESSIONAL ENGINEER
7/1/19

Designed by: SMK	Date: 4/19
Drawn by: AVK	Date: 4/19
Checked by: SMK	Date: 5/19
Fed. Funct. Class: Minor Collector	
Terrain Type: Mountainous	
Design Year: 2019	
Design Year ADT.: 497	
Design Speed: 30	

Nicholls Kovich Engineering, PLLC
P.O. Box 1050 Veradale WA 99037-1050
Phone: (509) 921-6747 Fax: (509) 242-8777
E-mail: info@nichollskovich.com

R.A.P. Project No. 2418-01

Approved: _____ Approval Date

Okanogan County
Department of Public Works
1234-A 2nd Ave. S. 509-422-7300
Okanogan, Washington 98840

COUNTY ROAD PROJECT NO. 9221-04

FOOTING LAYOUT & SE WINGWALL

STATLER BRIDGE REPLACEMENT

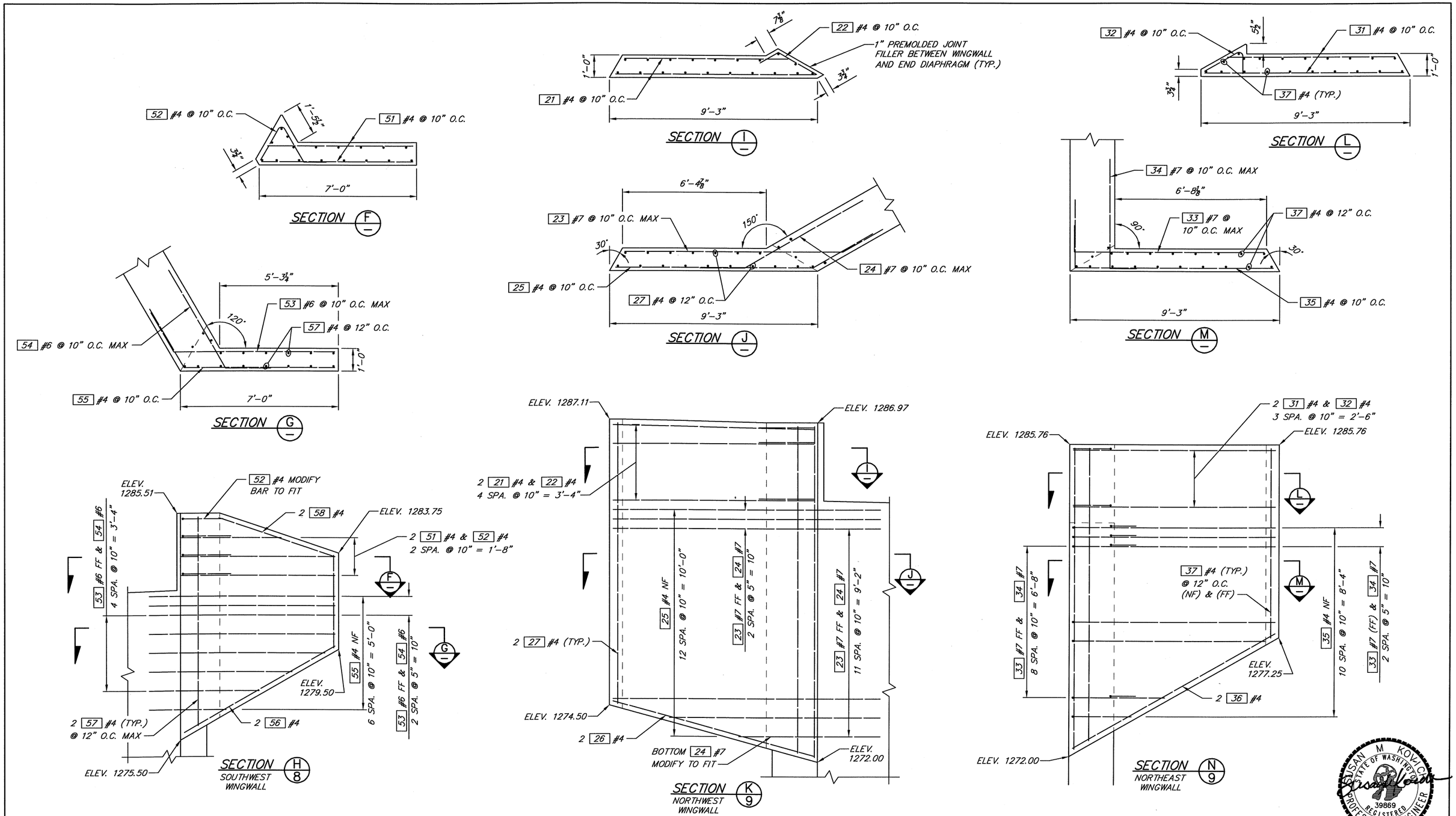

Designed by: SMK	Date: 4/19
Drawn by: AVK	Date: 4/19
Checked by: SMK	Date: 5/19
Fed. Funct. Class: Minor Collector	
Terrain Type: Mountainous	
Design Year: 2019	
Design Year ADT.: 497	
Design Speed: 30	

Nicholls Kovich Engineering, PLLC
P.O. Box 1050 Veradale WA 99037-1050
Phone: (509) 921-6747 Fax: (509) 242-8777
E-mail: info@nichollskovich.com

R.A.P. Project No. 2418-01

Approved: _____ Approval Date

Okanogan County Department of Public Works
1234-A 2nd Ave. S. 509-422-7300
Okanogan, Washington 98840

COUNTY ROAD PROJECT NO. 9221-04

SW, NW & NE WINGWALL DETAILS

STATLER BRIDGE REPLACEMENT

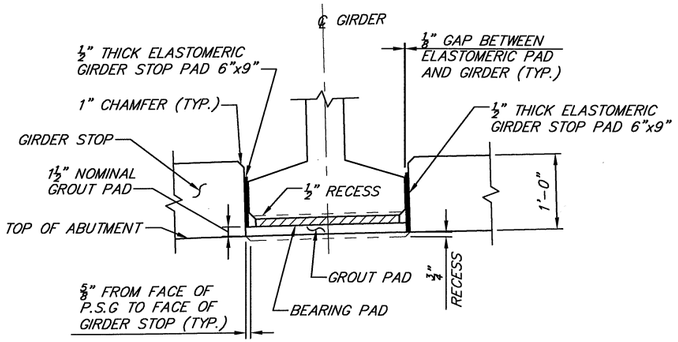

GIRDER STOP DETAIL

1. GIRDER STOPS SHALL BE CONSTRUCTED AFTER PLACEMENT OF PRESTRESSED GIRDERS.

2. ELASTOMERIC PADS BETWEEN GIRDER AND GIRDER STOPS SHALL BE PLACED AFTER CONSTRUCTION OF THE GIRDER STOPS. THE PADS SHALL BE CENTERED AND BONDED IN GIRDER STOPS WITH APPROVED ADHESIVE.

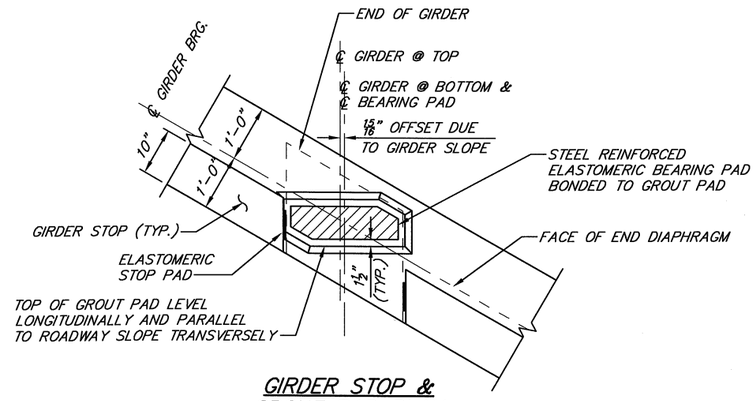

GIRDER STOP & GROUT PAD PLAN

SOUTH END

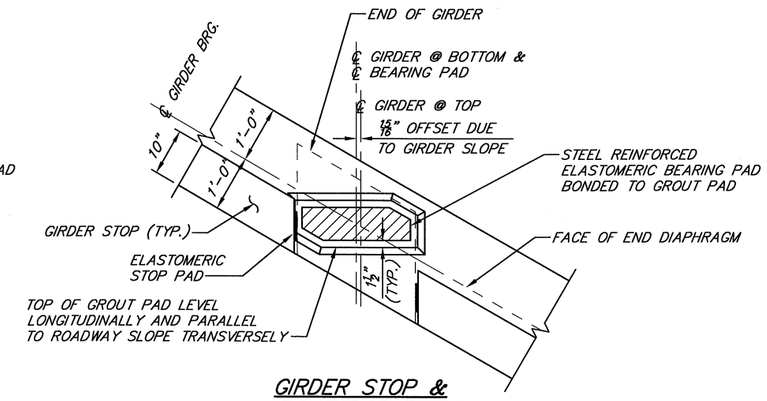

GIRDER STOP & GROUT PAD PLAN

NORTH END

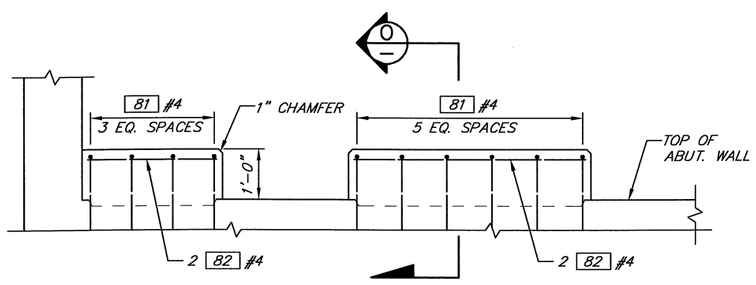

GIRDER STOP ELEVATION

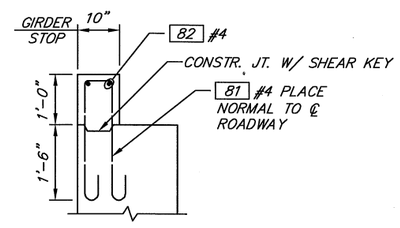

SECTION 0

TOP OF GROUT PAD ELEVATIONS

		GIR. A	GIR. B	GIR. C	GIR. D	GIR. E
ABUT. NO. 1	STATION	4+58.37	4+54.69	4+51.01	4+47.33	4+43.65
	OFFSET	12.83 LT.	6.45 LT.	0.08 LT.	6.30 RT.	12.67 RT.
	ELEVATION	1282.10	1281.86	1281.62	1281.39	1281.15
ABUT. NO. 2	STATION	5+24.06	5+20.38	5+16.70	5+13.02	5+09.34
	OFFSET	12.83 LT.	6.45 LT.	0.08 LT.	6.30 RT.	12.67 RT.
	ELEVATION	1283.51	1283.27	1283.03	1282.79	1282.55

NOTE: ELEVATIONS SHOWN ARE AT ℄ BEARING TOP OF GROUT PAD

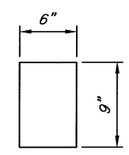

18 REQUIRED

GIRDER STOP PAD PLAN

½" THICK ELASTOMERIC PADS (60 DUROMETER HARDNESS)

SUSAN M KOVICH
STATE OF WASHINGTON
39869
REGISTERED PROFESSIONAL ENGINEER
7/1/19

Designed by: SMK	Date: 4/19
Drawn by: AVK	Date: 4/19
Checked by: SMK	Date: 5/19
Fed. Funct. Class: Minor Collector	
Terrain Type: Mountainous	
Design Year: 2019	
Design Year ADT: 497	
Design Speed: 30	

Nicholls Kovich Engineering, PLLC
P.O. Box 1050 Veradale WA 99037-1050
Phone: (509) 921-6747 Fax: (509) 242-8777
E-mail: info@nichollskovich.com

R.A.P. Project No. 2418-01

Approved: _____ Approval Date

Okanogan County Department of Public Works
1234-A 2nd Ave. S. 509-422-7300
Okanogan, Washington 98840

COUNTY ROAD PROJECT NO. 9221-04

MISC. ABUTMENT DETAILS

STATLER BRIDGE REPLACEMENT

GIRDER NOTES

1. PLAN LENGTH SHALL BE INCREASED AS NECESSARY TO COMPENSATE FOR SHORTENING DUE TO PRESTRESS AND SHRINKAGE.

2. ALL PRESTRESSING STRANDS SHALL BE 0.6"ø AASHTO M203 GRADE 270 LOW RELAXATION STRANDS JACKED TO 43.9 KIPS (0.75Fy = 202.5 KSI). ALL MILD STEEL REINFORCING SHALL BE AASHTO M31, GRADE 60.

3. CUT ALL STRANDS FLUSH WITH THE GIRDER ENDS AND PAINT WITH AN APPROVED EPOXY RESIN, EXCEPT FOR EXTENDED STRANDS AS SHOWN.

4. THE TOP SURFACE OF THE GIRDER FLANGE SHALL BE FINISHED IN ACCORDANCE WITH SECTION 6-02.3(25)H OF THE STANDARD SPECIFICATIONS.

5. LIFTING EMBEDMENTS SHALL BE INSTALLED IN ACCORDANCE WITH SECTION 6-02.3(25)L OF THE STANDARD SPECIFICATIONS. AFTER ERECTION, CUT OFF LIFTING EMBEDMENTS 1 INCH BELOW THE TOP OF THE FLANGE AND FILL WITH AN APPROVED GROUT.

6. CAUTION SHALL BE EXERCISED IN HANDLING AND PLACING GIRDERS. ALL GIRDERS SHALL BE CHECKED BY THE CONTRACTOR TO ENSURE THAT THEY ARE BRACED ADEQUATELY TO PREVENT TIPPING AND TO CONTROL LATERAL BENDING DURING SHIPPING. ONCE ERECTED, ALL GIRDERS SHALL BE BRACED LATERALLY TO PREVENT TIPPING UNTIL THE DIAPHRAGMS ARE CAST AND CURED.

7. FORMS FOR BEARING PAD RECESSES SHALL BE CONSTRUCTED AND FASTENED IN SUCH A MANNER AS TO NOT CAUSE DAMAGE TO THE GIRDER DURING THE STRAND RELEASE OPERATION.

8. STRUCTURAL STEEL SHAPES AND ASSEMBLIES SHALL BE ASTM A36. THEY SHALL BE PAINTED WITH A PRIMER COAT IN ACCORDANCE WITH STD. SPEC. 6-07.3(9). WELD TIES SHALL BE PAINTED WITH A FIELD PRIMER COAT OF AN ORGANIC ZINC PAINT AFTER FIELD WELDING.

9. FOR INTERIOR DIAPHRAGMS, OMIT HOLES AND PLACE INSERTS ON THE INTERIOR FACE OF EXTERIOR GIRDERS. PLACE HOLES AND INSERTS PARALLEL TO SKEW. INSERTS SHALL BE 1"ø MEADOWBURKE MX-3 HI-TENSILE, 1"ø x 5½" WILLIAMS F22 OPEN FERRULE INSERT, 1"ø x 4⅝" DAYTON-SUPERIOR F-62 FLARED THIN SLAB FERRULE INSERT OR APPROVED EQUAL.

10. TOP 2" OF THE GIRDER FLANGE SHALL BE AIR-ENTRAINED CONCRETE.

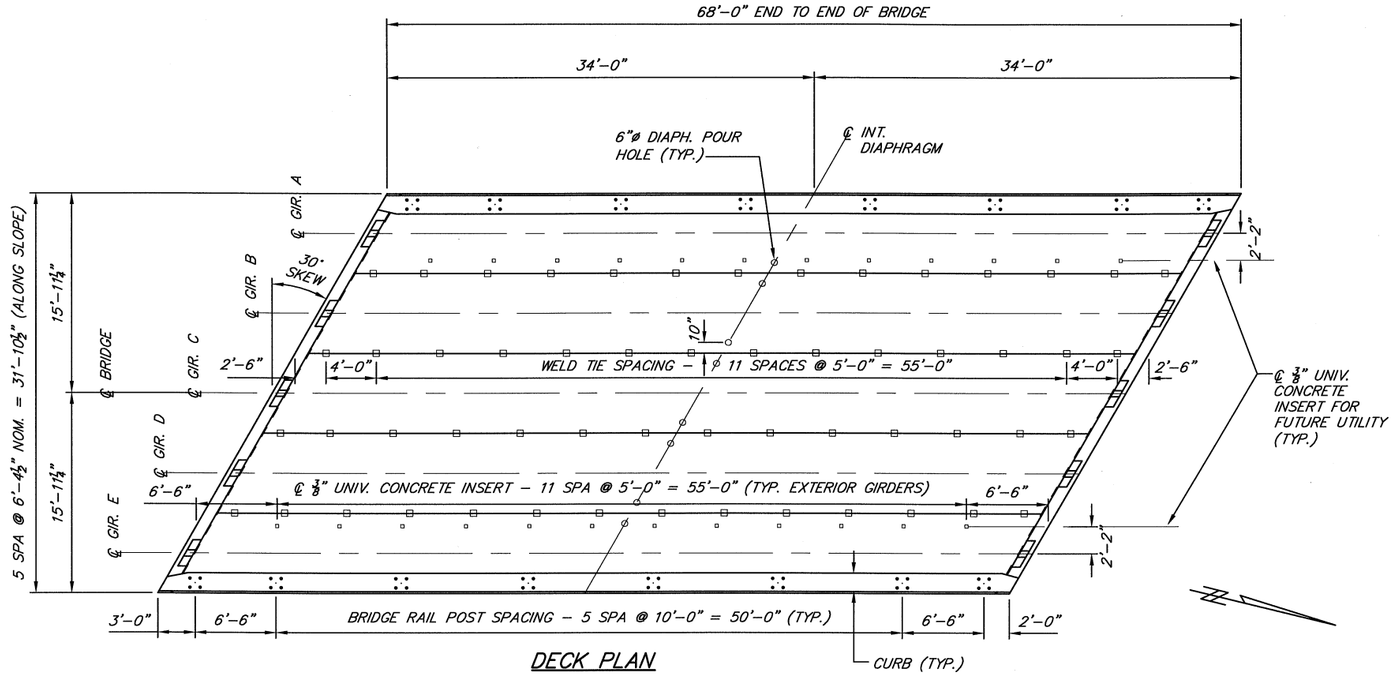

DECK PLAN

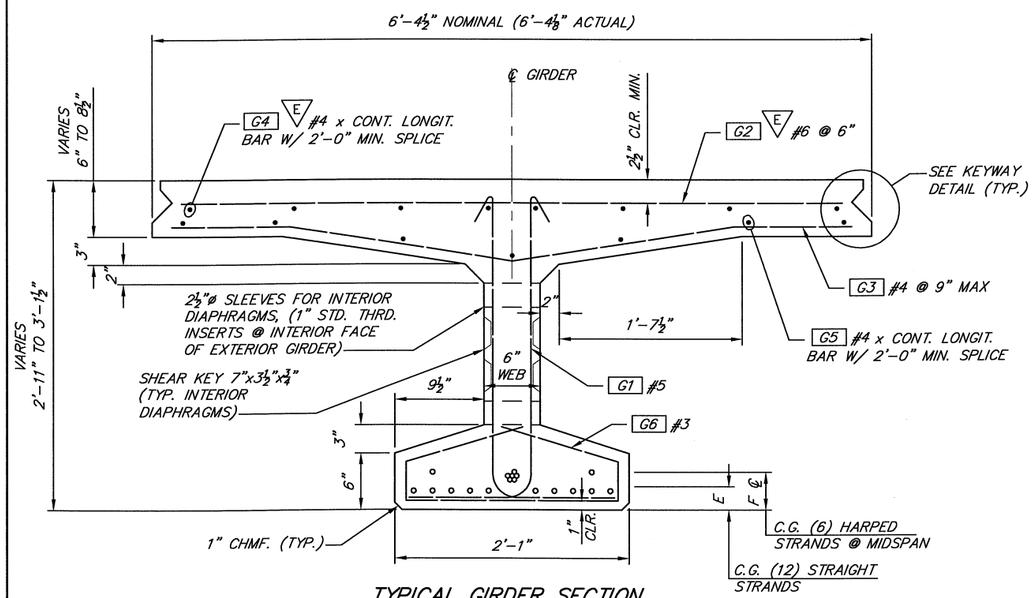

TYPICAL GIRDER SECTION

INTERIOR GIRDER SHOWN NEAR MIDSPAN
EXTERIOR GIRDER SIMILAR,
EXCEPT OMIT KEYWAY ON EXTERIOR
EDGE & ADD UTILITY INSERTS

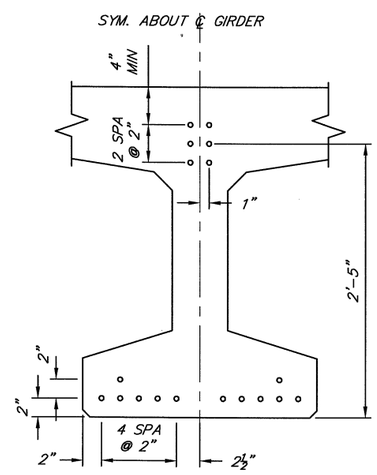

STRAND AT GIRDER ENDS

GIRDER SCHEDULE

ALL STRANDS SHALL BE 0.60"ø

SPAN NUMBER	GIRDERS	PLAN LENGTH ALONG GIRDER GRADE (FT.)	SPAN LENGTH ℄–℄ BRG. (FT.)	STRENGTH OF CONCRETE		NO. OF STR. STRANDS	NO. OF HARPED STRANDS	JACKING FORCE (KIPS)	LOCATION OF C.G. STRANDS			℄ OF LIFTING LOOPS
				FINAL F'c (KSI)	RELEASE F'c (KSI)				E (IN)	F℄ (IN)	F_{END} (IN)	L (FT.)
1	A–E	67.25	65.70	7.00	5.50	12	6	790.97	2.33	4.00	29.00	3.00

GIRDER BAR LIST

ALL REINFORCING SHALL BE AASHTO M 31, GR. 60.

MARK	LOCATION	SIZE	BENDING DIAGRAMS (ALL DIMENSIONS ARE OUT TO OUT)
G1	GIRDER STIRRUPS	5	
G2	GIRDER TOP FLANGE	6	STR. E
G3	GIRDER TOP FLANGE BOTTOM BAR	4	
G4	GIRDER CONT. LONGIT. TOP FLANGE	4	STR. E
G5	GIRDER CONT. LONGIT TOP FLANGE	4	STR.
G6	GIRDER BOTTOM FLANGE TIES	3	
G7	GIRDER WEB TIES	3	

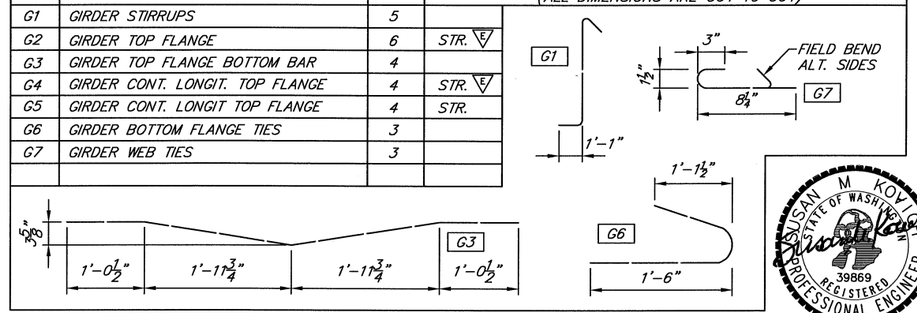

SUSAN M KOVICH
STATE OF WASHINGTON
39869
REGISTERED PROFESSIONAL ENGINEER
7/1/19

Designed by: SMK	Date: 4/19
Drawn by: SEC	Date: 4/19
Checked by: SMK	Date: 4/19
Fed. Funct. Class: Minor Collector	
Terrain Type: Mountainous	
Design Year: 2019	
Design Year ADT.: 497	
Design Speed: 30	

Nicholls Kovich Engineering, PLLC
P.O. Box 1050 Veradale WA 99037-1050
Phone: (509) 921-6747 Fax: (509) 242-8777
E-mail: info@nichollskovich.com

R.A.P. Project No. 2418-01

Approved: _____ Approval Date

Okanogan County Department of Public Works
1234-A 2nd Ave. S. 509-422-7300
Okanogan, Washington 98840

COUNTY ROAD PROJECT NO. 9221-04

DECK PLAN & GIRDER DETAILS

STATLER BRIDGE REPLACEMENT

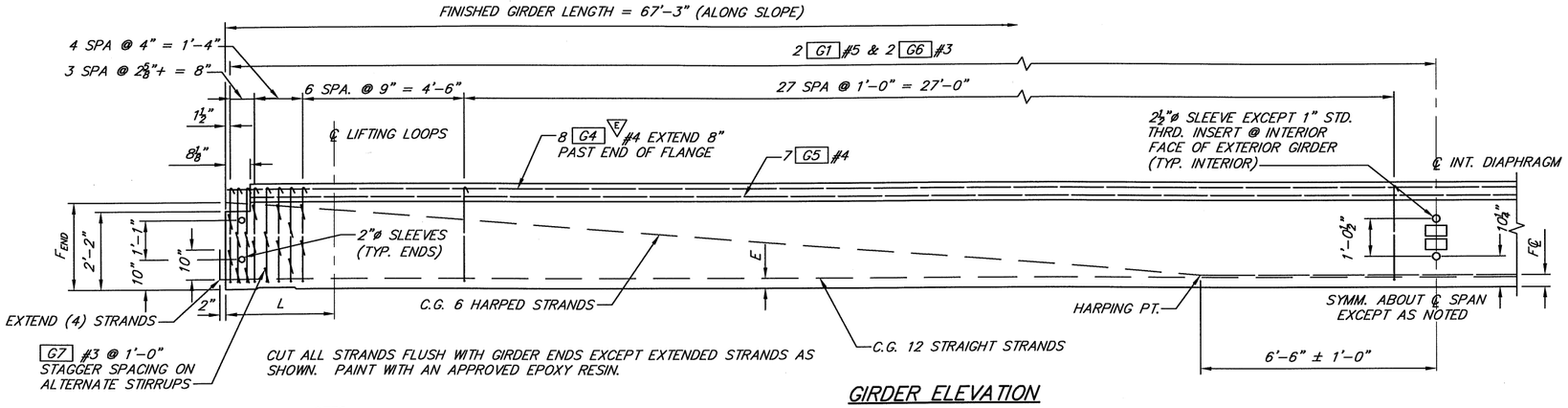

GIRDER ELEVATION

NOTES:
1. ALL DIMENSIONING SHOWN IS TAKEN AT ℄ OF GIRDER
2. GIRDER ENDS SHALL BE VERTICAL AFTER GIRDERS ARE SET

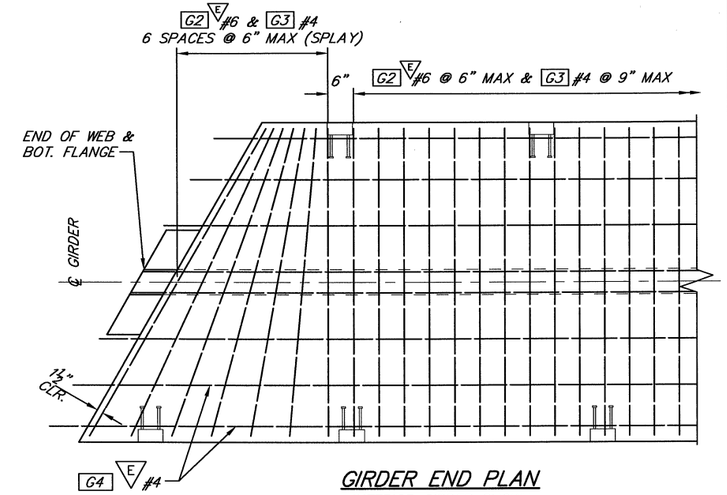

GIRDER END PLAN

INTERIOR GIRDER SHOWN
OMIT WELD TIES FOR EXTERIOR GIRDERS
OTHER REINFORCING NOT SHOWN FOR CLARITY

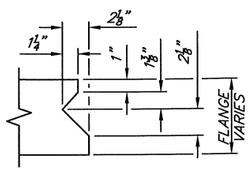

KEYWAY DETAIL

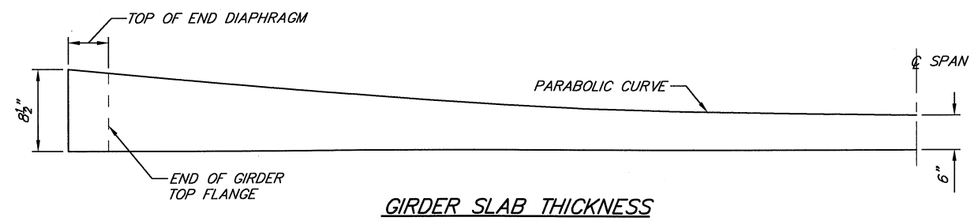

GIRDER SLAB THICKNESS

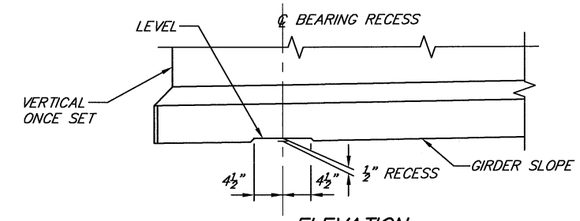

ELEVATION

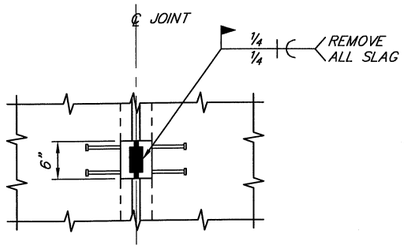

PLAN

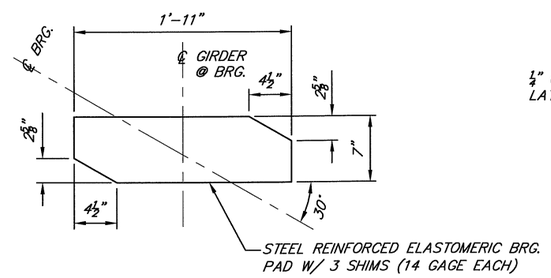

BEARING PAD PLAN

10 REQUIRED

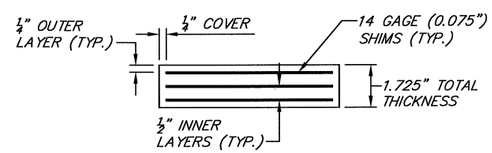

BEARING PAD ELEVATION

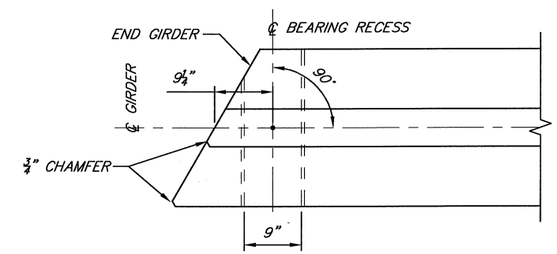

PLAN – TYP. BEARING RECESS

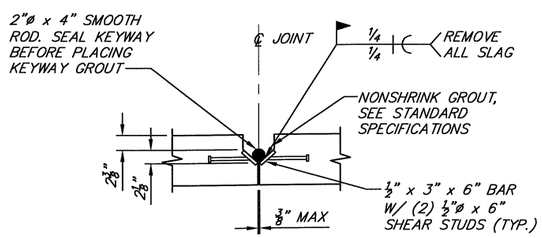

TYPICAL WELD TIE DETAIL

THE KEYWAYS SHALL BE LIGHTLY SAND BLASTED AT PLANT. AFTER FIELD WELDING IS COMPLETE, ALL EXPOSED SURFACES OF WELD TIES SHALL BE PAINTED WITH GALVANIZED PAINT.

BEARING NOTES

1. FABRICATE AND TEST BEARING PADS IN ACCORDANCE WITH AASHTO LRFD BRIDGE DESIGN SPECIFICATIONS METHOD B, AND AASHTO SPECIFICATION M 251, TEST REQUIREMENTS.

2. STEEL SHIMS FOR ELASTOMERIC BEARING PADS SHALL BE FABRICATED FROM MATERIAL MEETING ASTM A 1011, STRUCTURAL STEEL GRADE 36.

3. ELASTOMER SHALL MEET AASHTO SPECIFICATION M 251 REQUIREMENTS. ELASTOMER SHEAR MODULUS SHALL BE 165 PSI AT 73° F.

4. DESIGN COMPRESSIVE LOADS UNDER SERVICE I LIMIT STATE:

DEAD LOAD	= 49.2 KIPS
LIVE LOAD (W/O IMPACT)	= 59.8 KIPS
TOTAL LOAD	= 109.0 KIPS

SUSAN M KOVICH
STATE OF WASHINGTON
39869
REGISTERED PROFESSIONAL ENGINEER
7/1/19

Designed by: SMK	Date: 4/19
Drawn by: SEC	Date: 4/19
Checked by: SMK	Date: 4/19
Fed. Funct. Class: Minor Collector	
Terrain Type: Mountainous	
Design Year: 2019	
Design Year ADT.: 497	
Design Speed: 30	

Nicholls Kovich Engineering, PLLC
P.O. Box 1050 Veradale WA 99037-1050
Phone: (509) 921-6747 Fax: (509) 242-8777
E-mail: info@nichollskovich.com

R.A.P. Project No. 2418-01

Approved: _____ Approval Date

Okanogan County Department of Public Works
1234-A 2nd Ave. S. 509-422-7300
Okanogan, Washington 98840

COUNTY ROAD PROJECT NO. 9221-04

GIRDER REINFORCING & DETAILS

STATLER BRIDGE REPLACEMENT

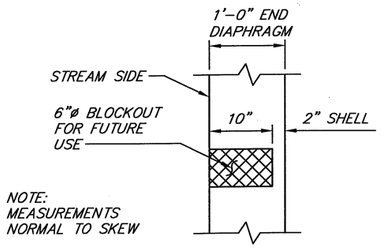

PARTIAL BLOCKOUT @ END DIAPHRAGMS

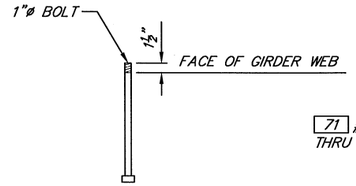

ANCHOR DETAIL

ASTM A-307

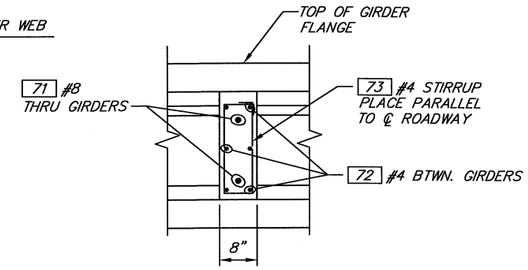

SECTION P

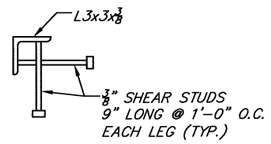

NOSING ANGLE DETAIL

GALVANIZE AFTER FABRICATION

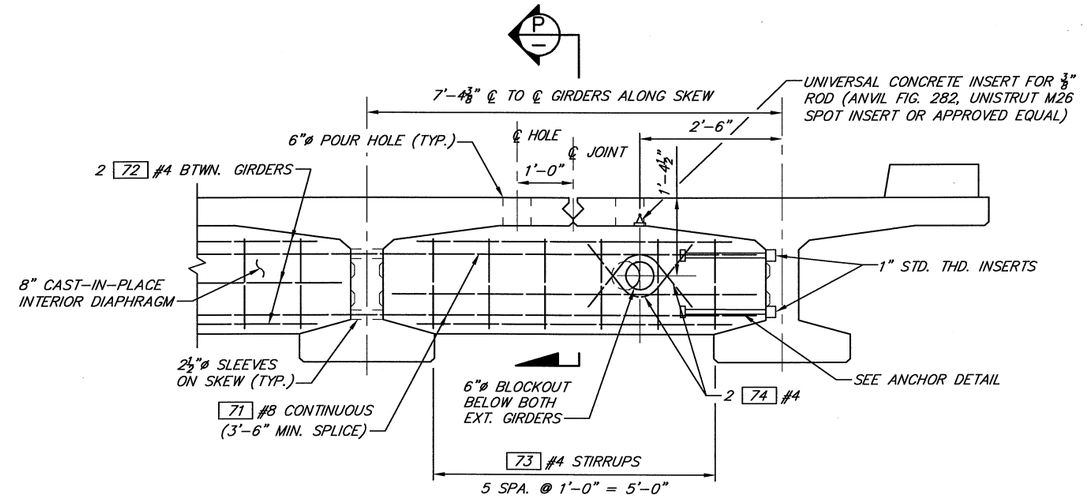

INTERIOR DIAPHRAGM ELEVATION

SHOWN NORMAL TO SKEW

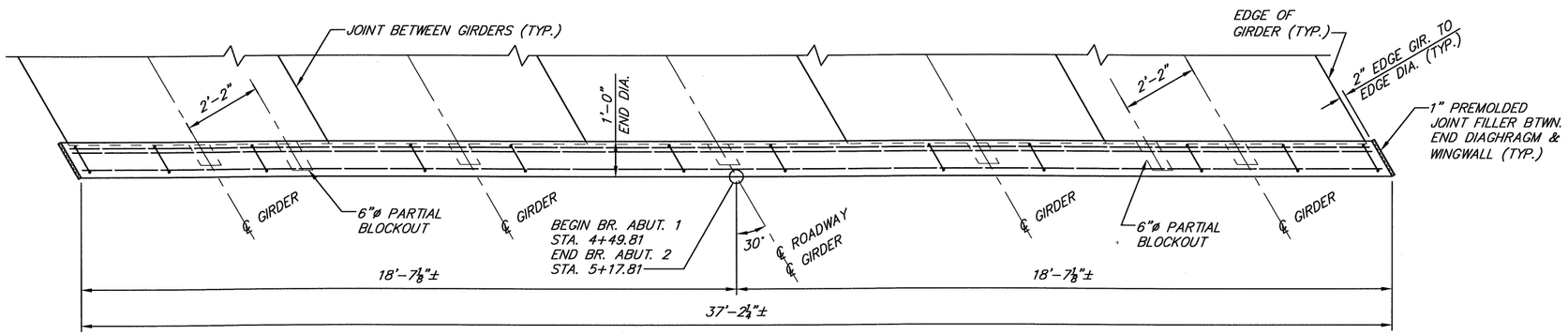

END DIAPHRAGM PLAN

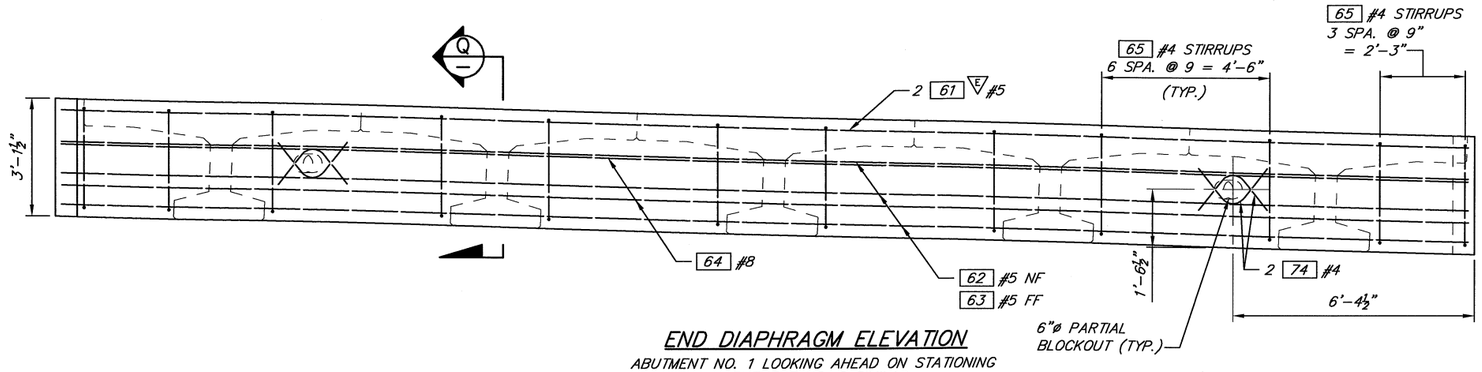

END DIAPHRAGM ELEVATION

ABUTMENT NO. 1 LOOKING AHEAD ON STATIONING
ABUTMENT NO. 2 SIMILAR

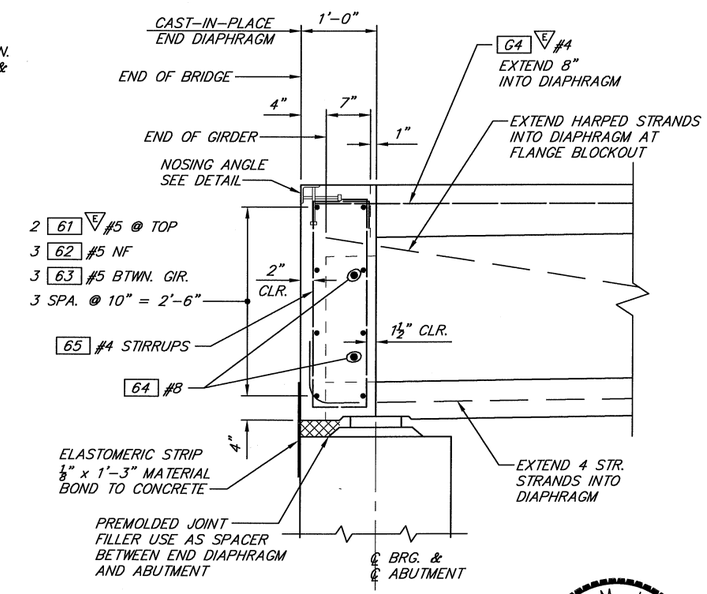

SECTION Q

7/1/19

Designed by: SMK Date: 4/19	Nicholls Kovich Engineering, PLLC	R.A.P. Project No. 2418-01	Okanogan County Department of Public Works
Drawn by: AVK Date: 4/19	P.O. Box 1050 Veradale WA 99037-1050	Approved: _____ Approval Date	1234-A 2nd Ave. S. 509-422-7300
Checked by: SMK Date: 5/19	Phone: (509) 921-6747 Fax: (509) 242-8777		Okanogan, Washington 98840
Fed. Funct. Class: Minor Collector	E-mail: info@nichollskovich.com		
Terrain Type: Mountainous			
Design Year: 2019			
Design Year ADT.: 497			
Design Speed: 30			

COUNTY ROAD PROJECT NO. 9221-04

DIAPHRAGM DETAILS

STATLER BRIDGE REPLACEMENT

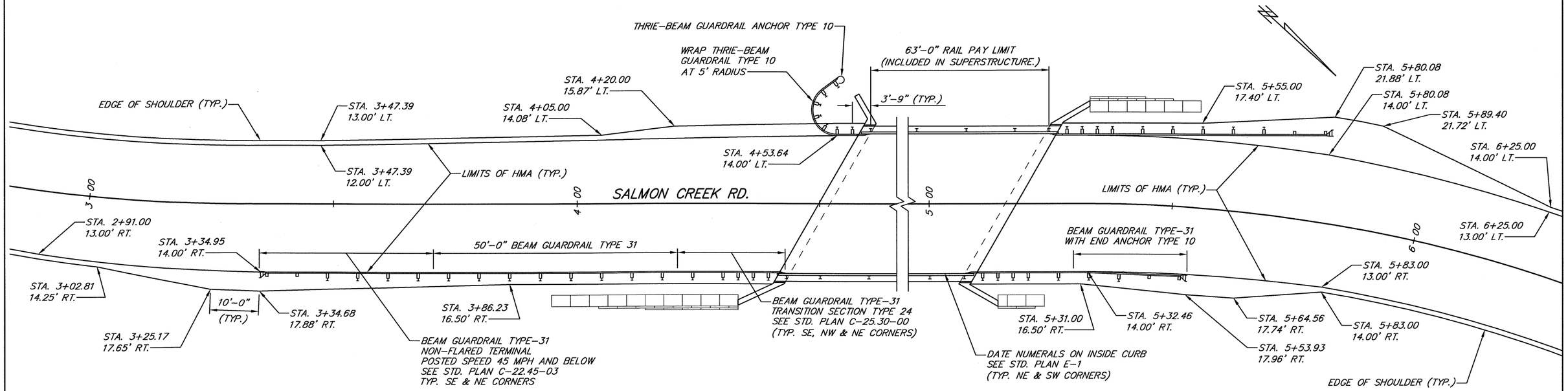

GUARDRAIL & SHOULDER LAYOUT

ALL GUARDRAIL POSTS SHALL BE STEEL EXCEPT AS REQUIRED OTHERWISE BY STANDARD WSDOT PLANS

RAILING NOTES

1. CONCRETE FOR CURBS SHALL BE CONCRETE CLASS 4000.
2. ANCHOR BOLTS, NUTS AND WASHERS SHALL CONFORM WITH A.S.T.M. F-1554 GRADE 105 AND ARE TO BE GALVANIZED IN ACCORDANCE WITH A.S.T.M. A-153, UNLESS NOTED OTHERWISE.
3. RAILING SHALL BE FABRICATED FROM SQ. STR. TUBE CONFORMING TO A.S.T.M. A-500 GRADE B, A.S.T.M. A-618, OR A.S.T.M. A-501 STEEL. POSTS, ANGLES, PLATES AND SLEEVES ARE TO BE A.S.T.M. A-36 STEEL.
4. THE RAILING SHALL BE FABRICATED IN A PLANT EXPERIENCED IN PRODUCING RAILINGS AND ARCHITECTURAL METAL WORK AND SHALL BE ERECTED BY SKILLED WORKMAN EXPERIENCED IN THIS TYPE OF WORK. FABRICATION AND ERECTION OF THE RAILING SHALL CONFORM TO THE REQUIREMENTS OF THE AASHTO SPECIFICATIONS FOR HIGHWAY BRIDGES AND WSDOT STANDARD SPECIFICATIONS FOR ROAD, BRIDGE, AND MUNICIPAL CONSTRUCTION, DATED 2018.
5. SHOP DRAWINGS SHALL BE SUBMITTED TO THE ENGINEER AND SHALL INCLUDE COMPLETE DIMENSIONS AND DETAILS OF FABRICATION INCLUDING AN ERECTION DIAGRAM. MATERIALS BEING USED SHALL BE CLEARLY SPECIFIED.
6. ALL POSTS SHALL BE VERTICAL.
7. RAILINGS AND SLEEVES SHALL BE GALVANIZED AFTER FABRICATION IN ACCORDANCE WITH A.S.T.M. SPECIFICATION A-123 AND A.S.T.M. A-385. ALL WELDED AREAS SHALL BE THOROUGHLY CLEANED PRIOR TO GALVANIZING TO REMOVE ALL SLAG OR OTHER MATERIAL THAT WOULD INTERFERE WITH THE ADHERENCE OF THE ZINC. THE GALVANIZED SURFACES SHALL BE FREE OF FINS, ABRASIONS, ROUGH OR SHARP EDGES OR OTHER SURFACE DEFECTS.
8. GALVANIZE-CONTROL SILICON MEANS SILICON CONTENT OF THE BASE METAL SHALL BE IN THE RANGE OF 0 TO 0.06% (PREFERABLY 0 TO 0.04%) OR 0.15 TO 0.28% (PREFERABLY 0.15 TO 0.25%).
9. BASE PLATES AND ENDS OF TUBE SECTIONS AT SPLICES TO BE SAWED OR MILLED. CUT ENDS TO BE TRUE, SMOOTH AND FREE FROM BURRS OR RAGGED EDGES.
10. ALTERNATE SPLICE DETAIL MAY BE SUBMITTED FOR APPROVAL ON SHOP DRAWINGS.

SUSAN M KOVICH STATE OF WASHINGTON 39869 REGISTERED PROFESSIONAL ENGINEER
7/1/19

Designed by: SMK Date: 5/19 Drawn by: AVK Date: 5/19 Checked by: SMK Date: 5/19 Fed. Funct. Class: Minor Collector Terrain Type: Mountainous Design Year: 2019 Design Year ADT: 497 Design Speed: 30	Nicholls Kovich Engineering, PLLC P.O. Box 1050 Veradale WA 99037-1050 Phone: (509) 921-6747 Fax: (509) 242-8777 E-mail: info@nichollskovich.com	R.A.P. Project No. 2418-01 Approved: _____ Approval Date	OKANOGAN COUNTY DEPT. of PUBLIC WORKS Okanogan County Department of Public Works 1234-A 2nd Ave. S. 509-422-7300 Okanogan, Washington 98840	COUNTY ROAD PROJECT NO. 9221-04 GUARDRAIL & SHLD. LAYOUT, RAILING NOTES STATLER BRIDGE REPLACEMENT	SHEET 16 of 22

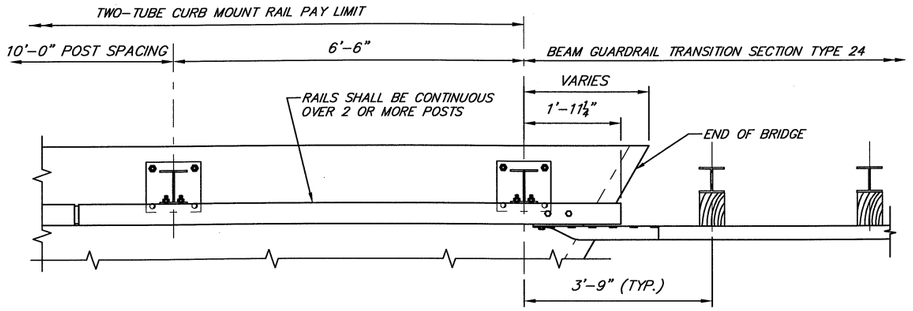

PLAN – CURB MOUNT RAIL

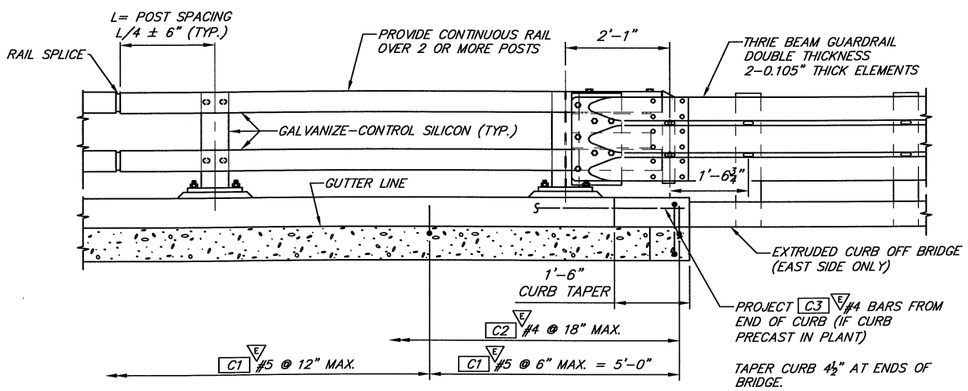

ELEVATION – CURB MOUNT RAIL

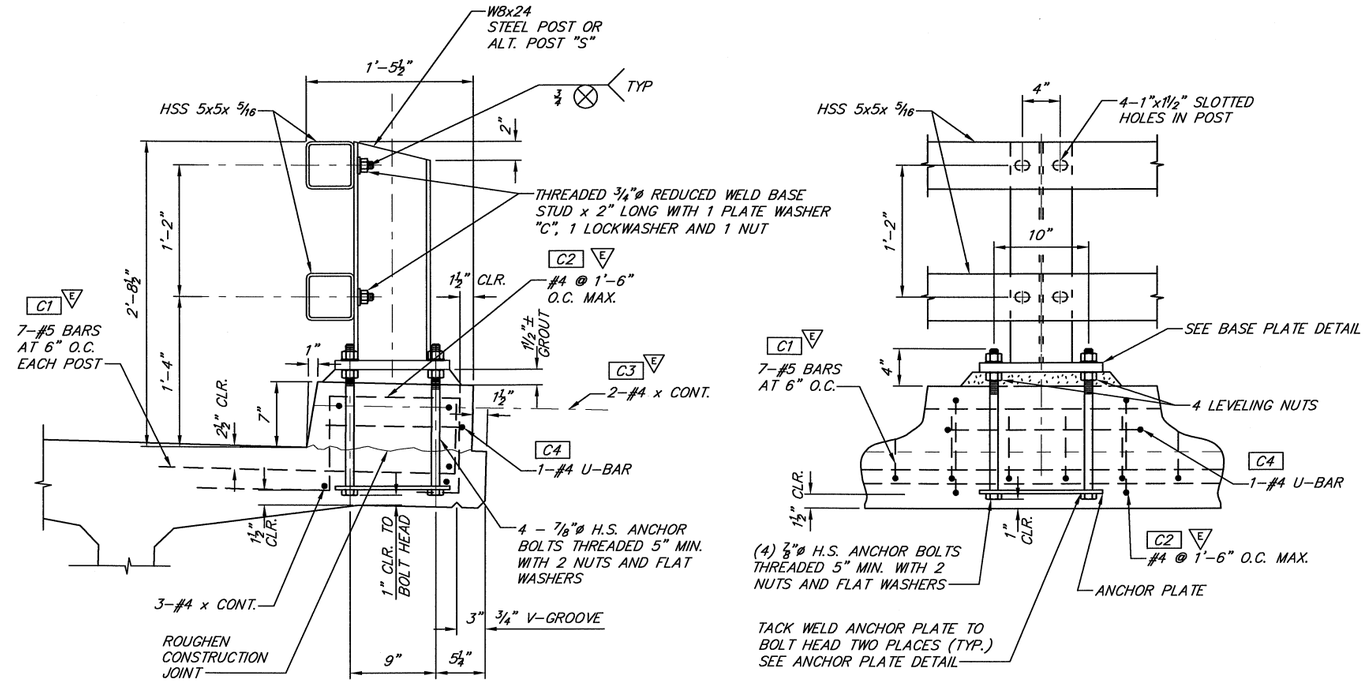

POST DETAILS

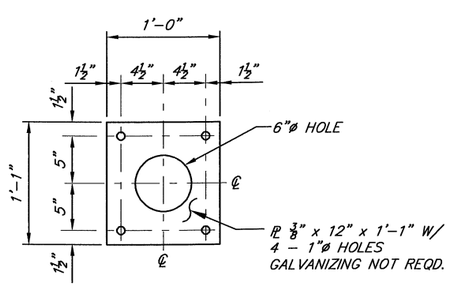

ANCHOR PLATE DETAILS

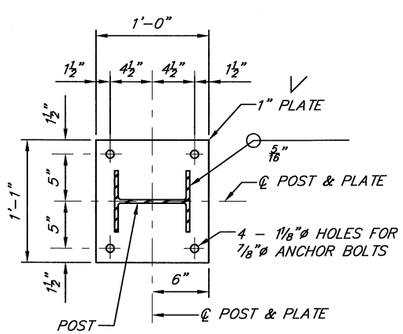

BASE PLATE DETAILS

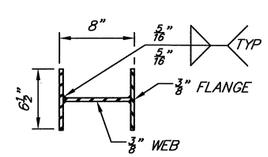

ALTERNATE POST "S"

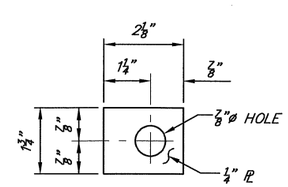

PLATE WASHER "C"

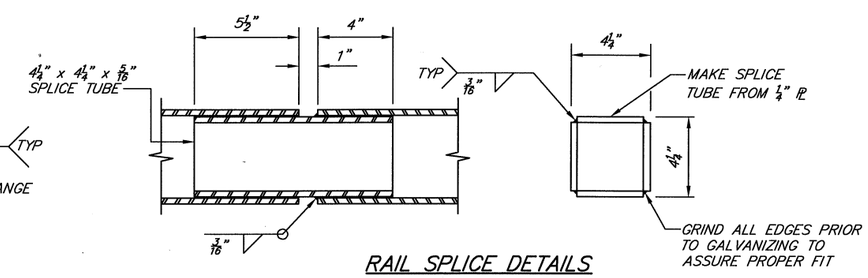

RAIL SPLICE DETAILS

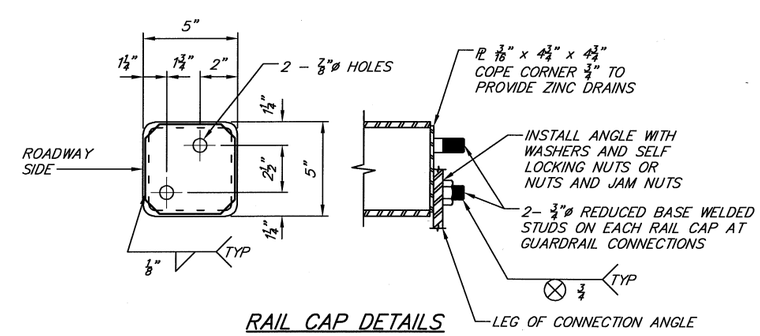

RAIL CAP DETAILS

SUSAN M KOVICH STATE OF WASHINGTON 39869 REGISTERED PROFESSIONAL ENGINEER
7/1/19

Designed by: SMK Date: 4/19	Nicholls Kovich Engineering, PLLC	R.A.P. Project No. 2418-01	Okanogan County Department of Public Works
Drawn by: SEC Date: 4/19	P.O. Box 1050 Veradale WA 99037-1050	Approved: _____ Approval Date	1234-A 2nd Ave. S. 509-422-7300
Checked by: SMK Date: 6/19	Phone: (509) 921-6747 Fax: (509) 242-8777		Okanogan, Washington 98840
Fed. Funct. Class: Minor Collector	E-mail: info@nichollskovich.com		
Terrain Type: Mountainous			
Design Year: 2019			
Design Year ADT.: 497			
Design Speed: 30			

COUNTY ROAD PROJECT NO. 9221-04

RAILING DETAILS 1

STATLER BRIDGE REPLACEMENT

SHEET 17 of 22

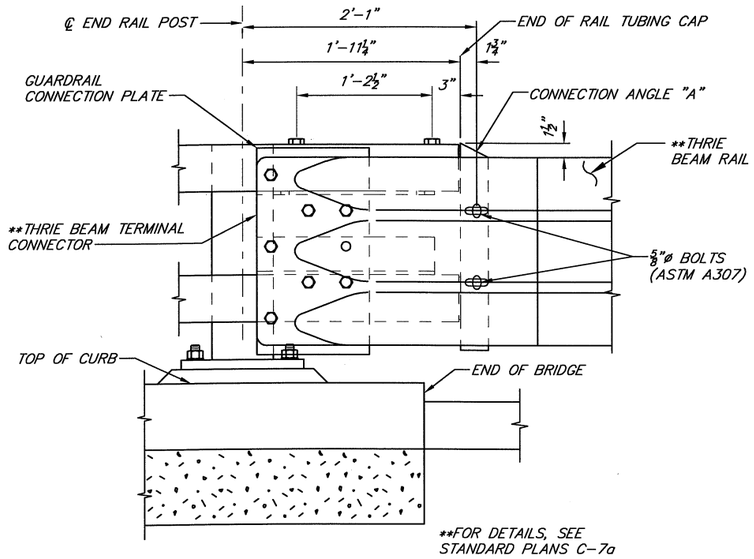

TERMINAL CONNECTOR

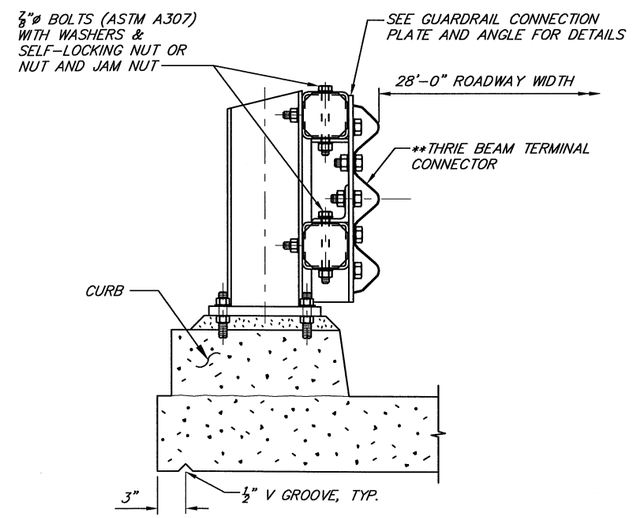

GUARDRAIL CONNECTION DETAIL

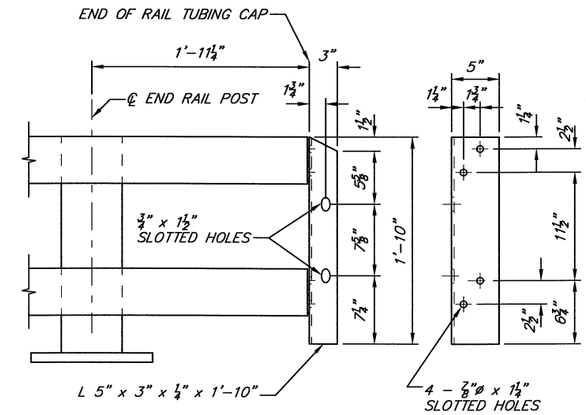

CONNECTION ANGLE "A"

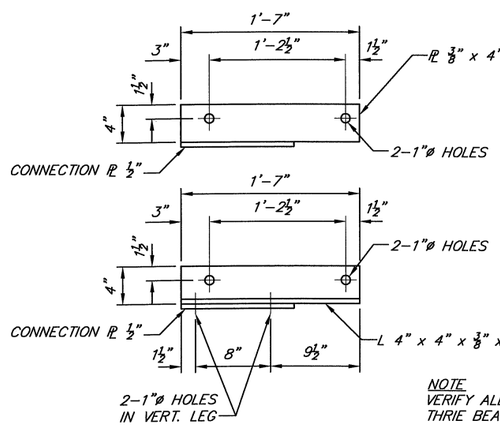

GUARDRAIL CONNECTION PLATE AND ANGLE

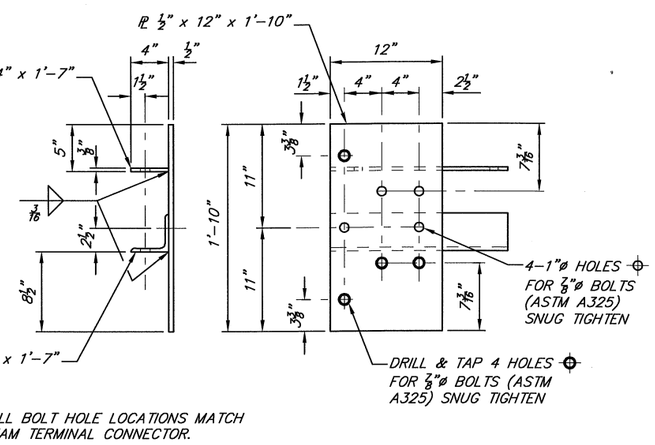

NOTE
VERIFY ALL BOLT HOLE LOCATIONS MATCH THRIE BEAM TERMINAL CONNECTOR.

GUARDRAIL CONNECTION PLATE

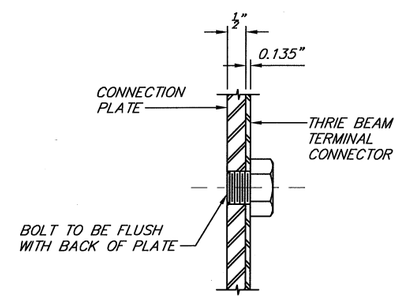

DETAIL "B"

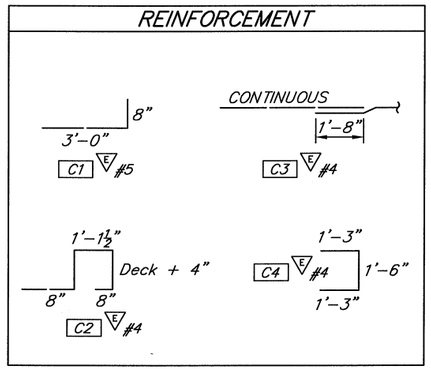

SUSAN M. KOVICH
STATE OF WASHINGTON
39869
REGISTERED PROFESSIONAL ENGINEER
7/1/19

Designed by: SMK	Date: 4/19
Drawn by: SEC	Date: 4/19
Checked by: SMK	Date: 6/19
Fed. Funct. Class: Minor Collector	
Terrain Type: Mountainous	
Design Year: 2019	
Design Year ADT.: 497	
Design Speed: 30	

Nicholls Kovich Engineering, PLLC
P.O. Box 1050 Veradale WA 99037-1050
Phone: (509) 921-6747 Fax: (509) 242-8777
E-mail: info@nichollskovich.com

R.A.P. Project No. 2418-01

Approved: _____ Approval Date

Okanogan County Department of Public Works
1234-A 2nd Ave. S. 509-422-7300
Okanogan, Washington 98840

COUNTY ROAD PROJECT NO. 9221-04

RAILING DETAILS 2

STATLER BRIDGE REPLACEMENT

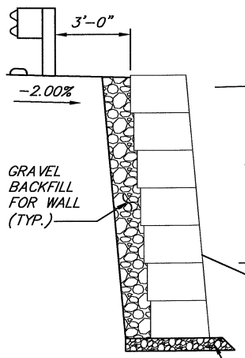

SECTION R

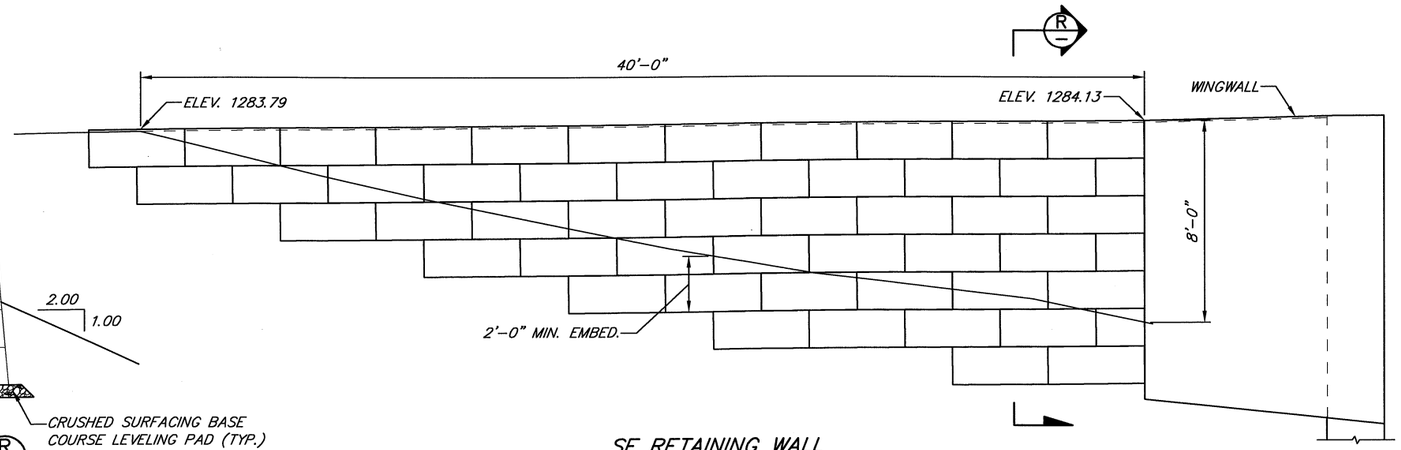

SE RETAINING WALL

NOTE: MODULAR BLOCK RETAINING WALLS TO BE DESIGNED BY CONTRACTOR. SEE SPECIAL PROVISIONS FOR DESIGN REQUIREMENTS.

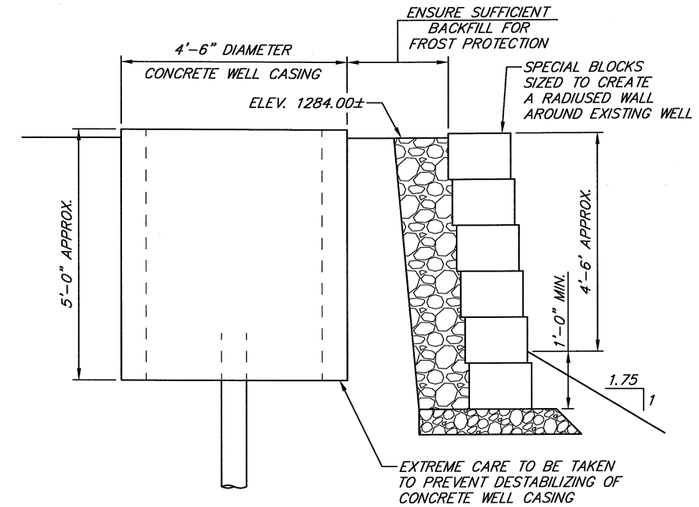

CONCEPTUAL SECTION
GRAVITY BLOCK WALL AT WELL

GRAVITY BLOCK WALL TO BE DESIGNED BY OTHERS

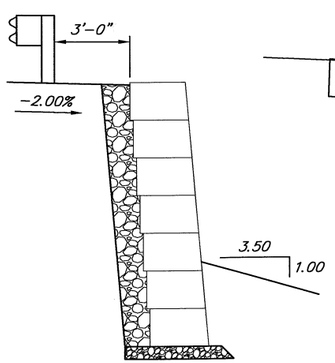

SECTION S

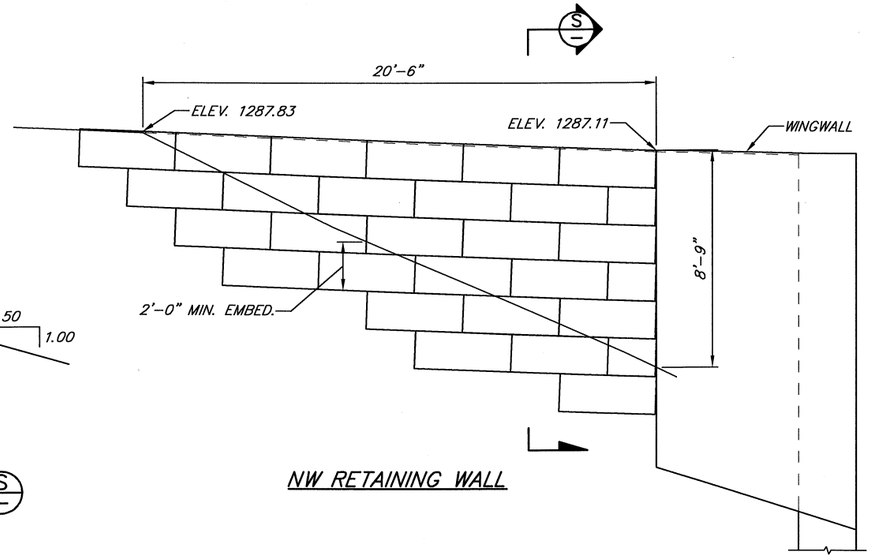

NW RETAINING WALL

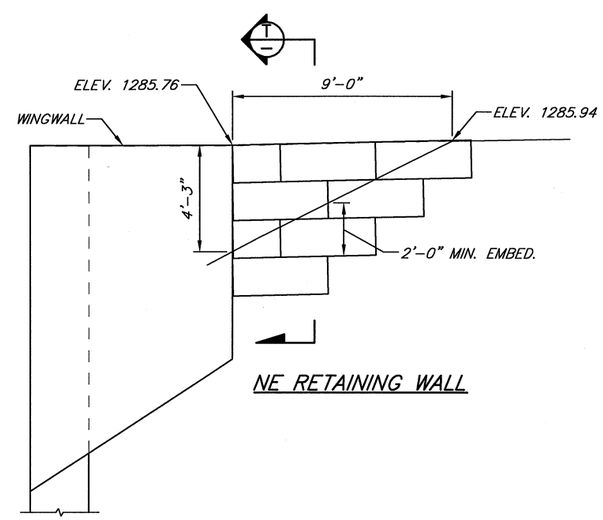

NE RETAINING WALL

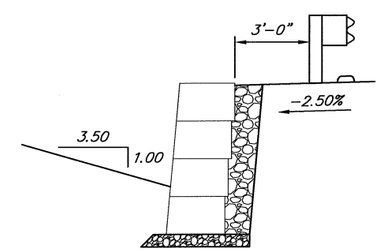

SECTION T

7/1/19

Designed by: SMK	Date: 4/19
Drawn by: AVK	Date: 4/19
Checked by: SMK	Date: 5/19
Fed. Funct. Class: Minor Collector	
Terrain Type: Mountainous	
Design Year: 2019	
Design Year ADT.: 497	
Design Speed: 30	

Nicholls Kovich Engineering, PLLC
P.O. Box 1050 Veradale WA 99037-1050
Phone: (509) 921-6747 Fax: (509) 242-8777
E-mail: info@nichollskovich.com

R.A.P. Project No. 2418-01

Approved: _____ Approval Date

Okanogan County
Department of Public Works
1234-A 2nd Ave. S. 509-422-7300
Okanogan, Washington 98840

COUNTY ROAD PROJECT NO. 9221-04

RETAINING WALL DETAILS

STATLER BRIDGE REPLACEMENT

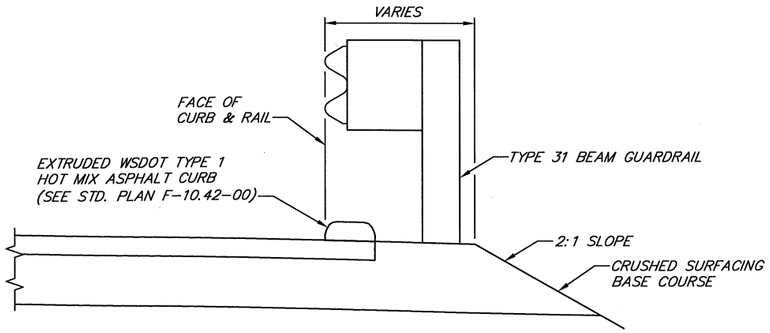

EXTRUDED CURB

EAST SIDE ONLY
SEE BRIDGE LAYOUT FOR LIMITS

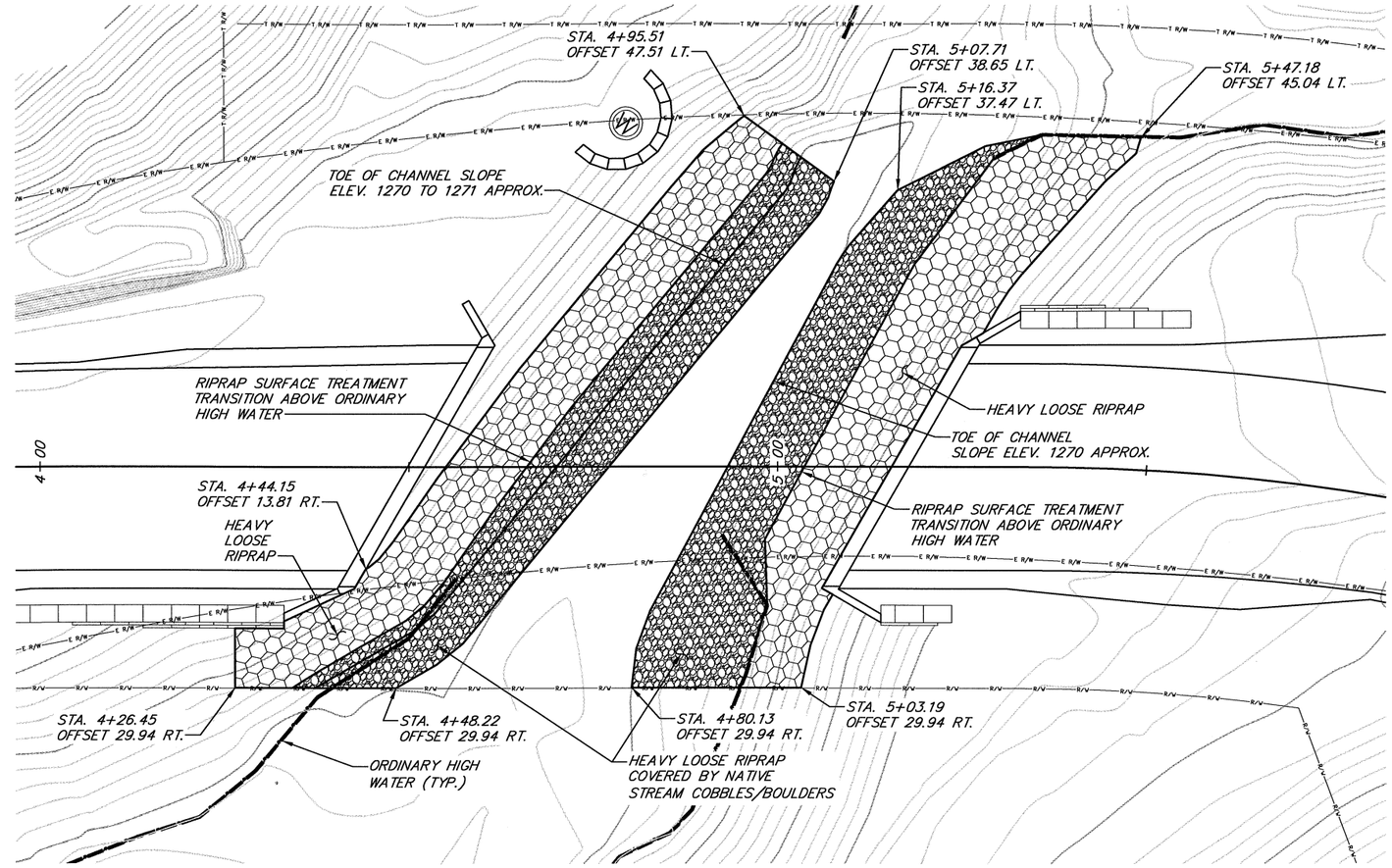

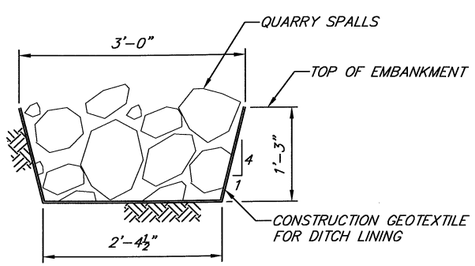

DRAINAGE DITCH SECTION (V)

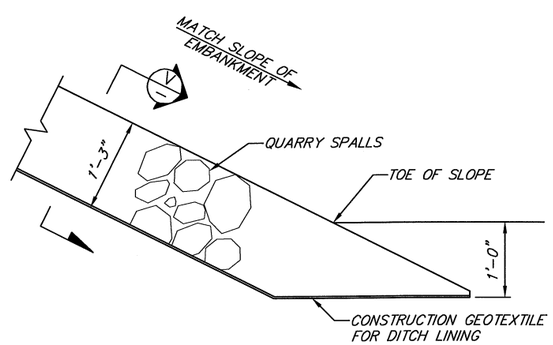

DRAINAGE DITCH ELEVATION

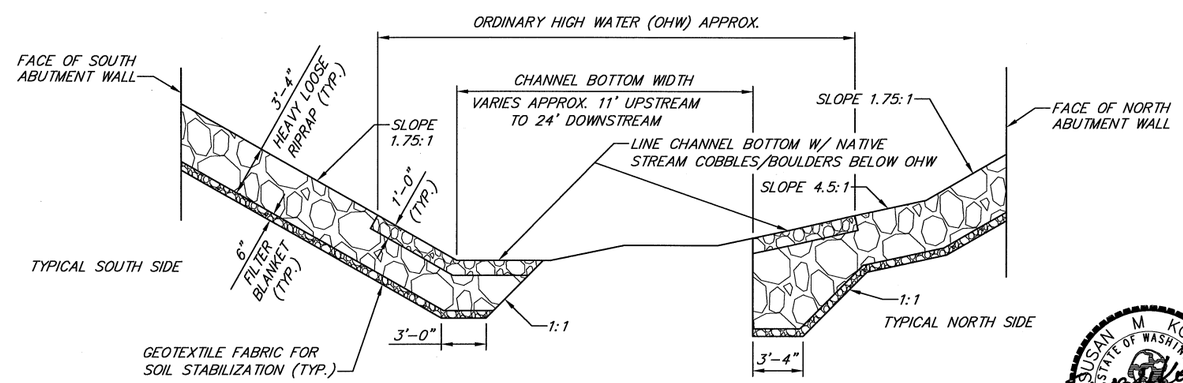

CHANNEL PROTECTION SECTION

PLACEMENT OF NATIVE STREAM COBBLES/BOULDERS SHALL BE INCIDENTAL TO CHANNEL EXCAVATION INCL. HAUL

SUSAN M KOVICH
STATE OF WASHINGTON
39869
REGISTERED PROFESSIONAL ENGINEER
7/1/19

Designed by: SMK	Date: 5/19
Drawn by: AVK	Date: 5/19
Checked by: SMK	Date: 6/19
Fed. Funct. Class: Minor Collector	
Terrain Type: Mountainous	
Design Year: 2019	
Design Year ADT.: 497	
Design Speed: 30	

Nicholls Kovich Engineering, PLLC
P.O. Box 1050 Veradale WA 99037-1050
Phone: (509) 921-6747 Fax: (509) 242-8777
E-mail: info@nichollskovich.com

R.A.P. Project No. 2418-01

Approved: _____ Approval Date

Okanogan County Department of Public Works
1234-A 2nd Ave. S. 509-422-7300
Okanogan, Washington 98840

COUNTY ROAD PROJECT NO. 9221-04

CHANNEL PROTECTION DETAILS

STATLER BRIDGE REPLACEMENT

BAR LIST

MARK NO.	LOCATION	WEIGHT	SIZE	NO. REQ'D	LENGTH	REMARKS
	FOOTINGS					
1	ABUTMENT 1 FOOTING HEEL	1,077	7	51	10'–4"	
2	ABUTMENT 1 FOOTING TOE	1,181	7	51	11'–4"	
3	ABUTMENT 1 FOOTING TOP	897	6	56	10'–8"	STR.
4	ABUTMENT 2 FOOTING TOE	1,291	7	57	11'–1"	
5	ABUTMENT 2 FOOTING HEEL	1,350	7	57	11'–7"	
6	ABUTMENT 2 FOOTING TOP	1,086	6	62	11'–8"	STR.
7	TOP OF FOOTING	954	5	23	39'–9"	STR.
8	BOTTOM OF FOOTING	1,373	6	23	39'–9"	STR.
	ABUTMENT WALLS					
11	ABUTMENT 1 VERTICAL FRONT & BACK	2,676	7	102	12'–10" *	STR.
12	ABUTMENT 2 VERTICAL FRONT & BACK	3,320	7	114	14'–3" *	STR.
13	ABUTMENT WALL HORIZONTAL	1,964	5	50	37'–8"	STR.
14	ABUTMENT WALL HORIZONTAL TOP	121	5	4	29'–0"	STR.
15	ABUTMENT WALL TOP SLOPED	566	6	10	37'–8"	STR.
16	ABUTMENT WALL TOP TIES	180	4	108	2'–6"	
17	ABUTMENT WALL TIES	441	4	283	2'–4"	
	NORTHWEST WINGWALL					
21	HORIZONTAL TOP NF	29	4	5	8'–9"	STR.
21	HORIZONTAL TOP FF	24	4	5	7'–4"	STR.
22	HORIZONTAL EDGE	8	4	5	2'–6"	
23	HORIZONTAL FF	280	7	12	11'–5"	
23	HORIZONTAL FF	32	7	2	7'–10" *	
24	HORIZONTAL CORNER	227	7	14	7'–11"	
25	HORIZONTAL NF	86	4	11	11'–8"	
25	HORIZONTAL NF	10	4	2	7'–9" *	
26	HORIZONTAL BOTTOM	12	4	2	9'–1"	STR.
27	VERTICAL	171	4	19	13'–6" *	STR.
	NORTHEAST WINGWALL					
31	HORIZONTAL TOP NF	23	4	4	8'–9"	STR.
31	HORIZONTAL TOP FF	20	4	4	7'–4"	STR.
32	HORIZONTAL EDGE	7	4	4	2'–9"	
33	HORIZONTAL FF	134	7	7	9'–4"	
33	HORIZONTAL FF	59	7	4	7'–2" *	
34	HORIZONTAL CORNER	135	7	11	6'–0"	
35	HORIZONTAL NF	46	4	6	11'–6"	
35	HORIZONTAL NF	28	4	5	8'–3" *	
36	HORIZONTAL BOTTOM	13	4	2	10'–1"	STR.
37	VERTICAL	137	4	19	10'–10" *	STR.
	SOUTHEAST WINGWALL					
41	HORIZONTAL TOP NF	33	4	5	10'–0"	STR.
41	HORIZONTAL TOP FF	28	4	5	8'–6"	STR.
42	HORIZONTAL EDGE	8	4	5	2'–4"	
43	HORIZONTAL FF	309	7	12	12'–7"	
44	HORIZONTAL CORNER	194	7	12	7'–11"	
45	HORIZONTAL NF	96	4	11	13'–0"	
46	HORIZONTAL BOTTOM	13	4	2	10'–1"	STR.
47	VERTICAL	160	4	21	11'–5" *	STR.
	SOUTHWEST WINGWALL					
51	HORIZONTAL TOP	23	4	6	5'–9" *	STR.
52	HORIZONTAL EDGE	12	4	4	4'–7"	
53	HORIZONTAL FF	54	6	4	8'–11"	
53	HORIZONTAL FF	32	6	3	7'–1" *	
54	HORIZONTAL CORNER	73	6	7	6'–11"	
55	HORIZONTAL NF	19	4	3	9'–7"	
55	HORIZONTAL NF	18	4	4	6'–11" *	
56	HORIZONTAL BOTTOM	10	4	2	7'–8"	STR.
57	VERTICAL	76	4	17	6'–8" *	STR.
58	HORIZONTAL TOP DIAGONAL	7	4	2	5'–5"	STR.

MARK NO.	LOCATION	WEIGHT	SIZE	NO. REQ'D	LENGTH	REMARKS
	GIRDER STOPS					
81	GIRDER STOP STIRRUPS	234	4	56	6'–3"	
82	GIRDER STOP HORIZONTAL	47	4	16	4'–5"	STR.
82	GIRDER STOP HORIZONTAL	7	4	4	2'–6"	STR.
	SUBSTRUCTURE					
	UNCOATED BARS	21,411	LBS			
	END DIAPHRAGMS					
61	TOP HORIZONTAL	153	5	4	36'–9"	EPOXY, STR.
62	THRU HORIZONTAL	230	5	6	36'–9"	STR.
63	HORIZONTAL BETWEEN GIRDERS AT WEB	110	5	16	6'–7"	STR.
63	HORIZONTAL BETWEEN GIRDERS AT WEB	27	5	8	3'–3"	STR.
63	HORIZONTAL BETWEEN GIRDERS AT BULB	40	5	8	4'–10"	STR.
63	HORIZONTAL BETWEEN GIRDERS AT BULB	10	5	4	2'–5"	STR.
64	HORIZONTAL THRU SLEEVES	392	8	4	36'–9"	STR.
65	STIRRUPS	353	4	72	7'–4"	
	INTERIOR DIAPHRAGMS					
71	THRU HORIZONTAL	67	8	2	12'–6"	STR.
71	THRU HORIZONTAL	105	8	2	19'–9"	STR.
72	HORIZONTAL BETWEEN GIRDERS AT WEB	35	4	8	6'–7"	STR.
72	HORIZONTAL BETWEEN GIRDERS AT BULB	61	4	16	5'–8"	STR.
73	STIRRUPS	69	4	24	4'–4"	
74	BLOCKOUT REINFORCING	45	4	24	2'–10"	
	CURBS					
C3	CURB LONGITUDINAL	186	4	8	34'–10	EPOXY, STR.
C4	CURB U–BARS	41	4	16	3'–10"	EPOXY
	SUPERSTRUCTURE					
	UNCOATED BARS	1,544	LBS			
	EPOXY BARS	380	LBS			

BENDING DIAGRAM

ALL DIMENSIONS ARE OUT TO OUT

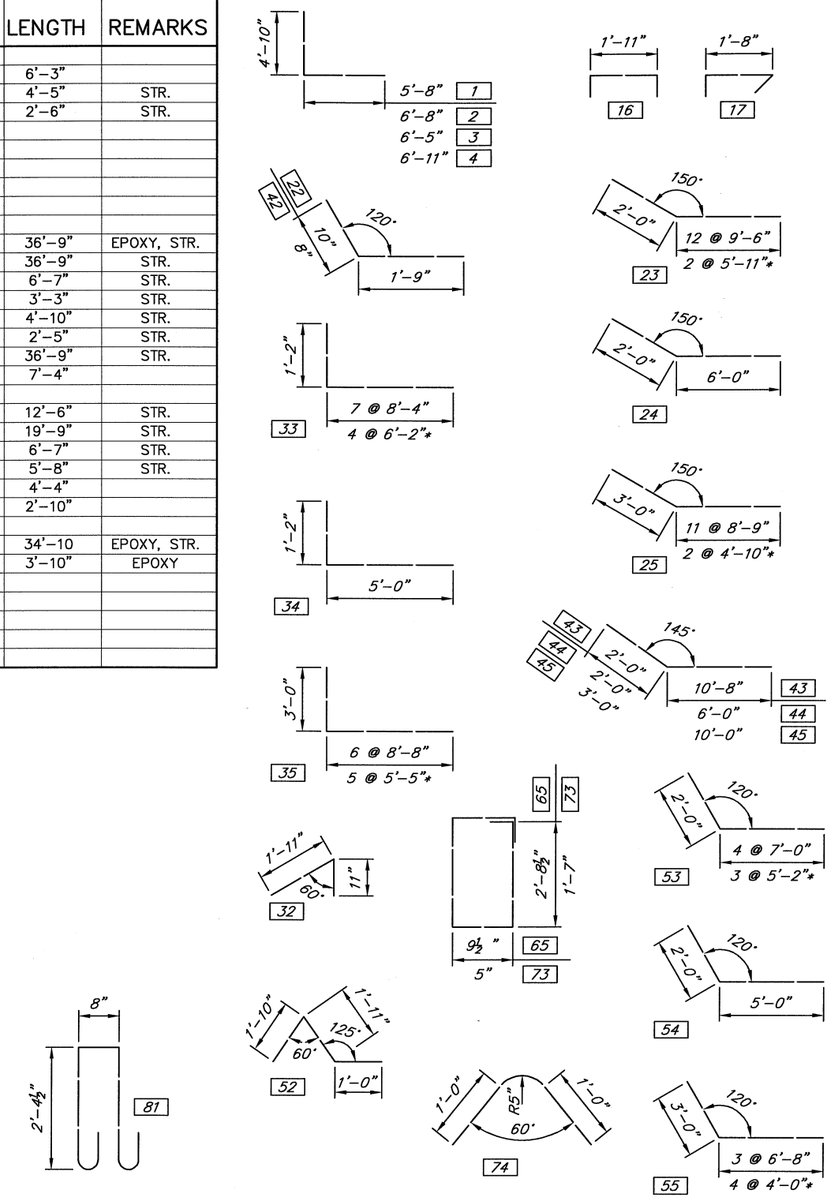

* DIMENSION VARIES – AVERAGE LENGTH

Designed by: SMK	Date: 4/19
Drawn by: AVK	Date: 4/19
Checked by: SMK	Date: 5/19
Fed. Funct. Class: Minor Collector	
Terrain Type: Mountainous	
Design Year: 2019	
Design Year ADT.: 497	
Design Speed: 30	

Nicholls Kovich Engineering, PLLC
P.O. Box 1050 Veradale WA 99037-1050
Phone: (509) 921-6747 Fax: (509) 242-8777
E-mail: info@nichollskovich.com

R.A.P. Project No. 2418–01

Approved: _____ Approval Date

Okanogan County Department of Public Works
1234–A 2nd Ave. S. 509–422–7300
Okanogan, Washington 98840

COUNTY ROAD PROJECT NO. 9221–04

BAR LIST

STATLER BRIDGE REPLACEMENT

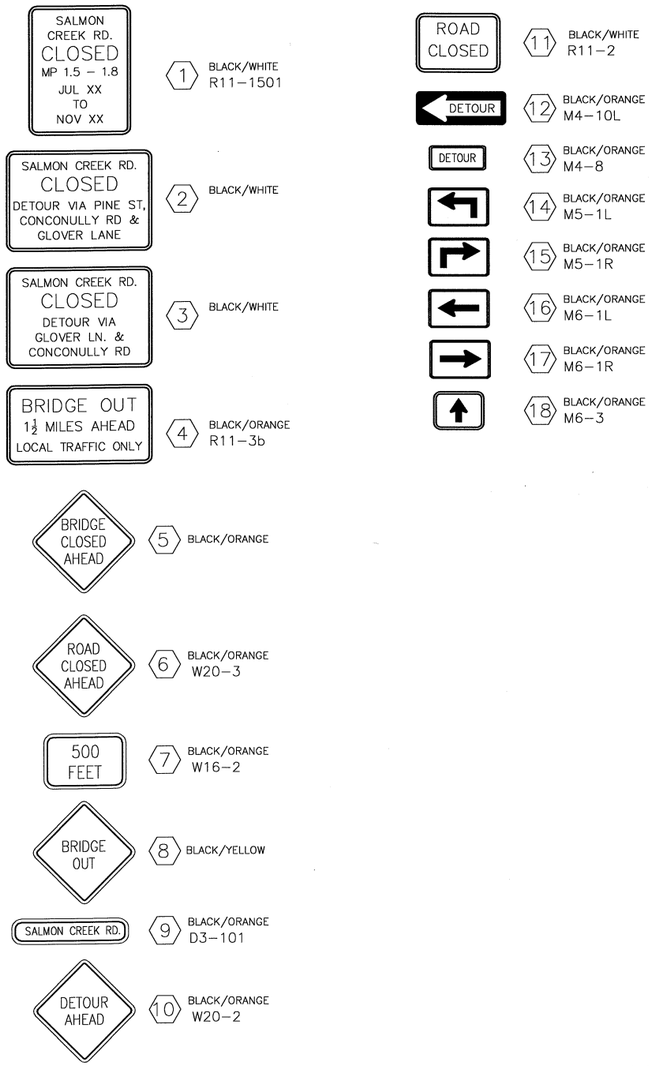

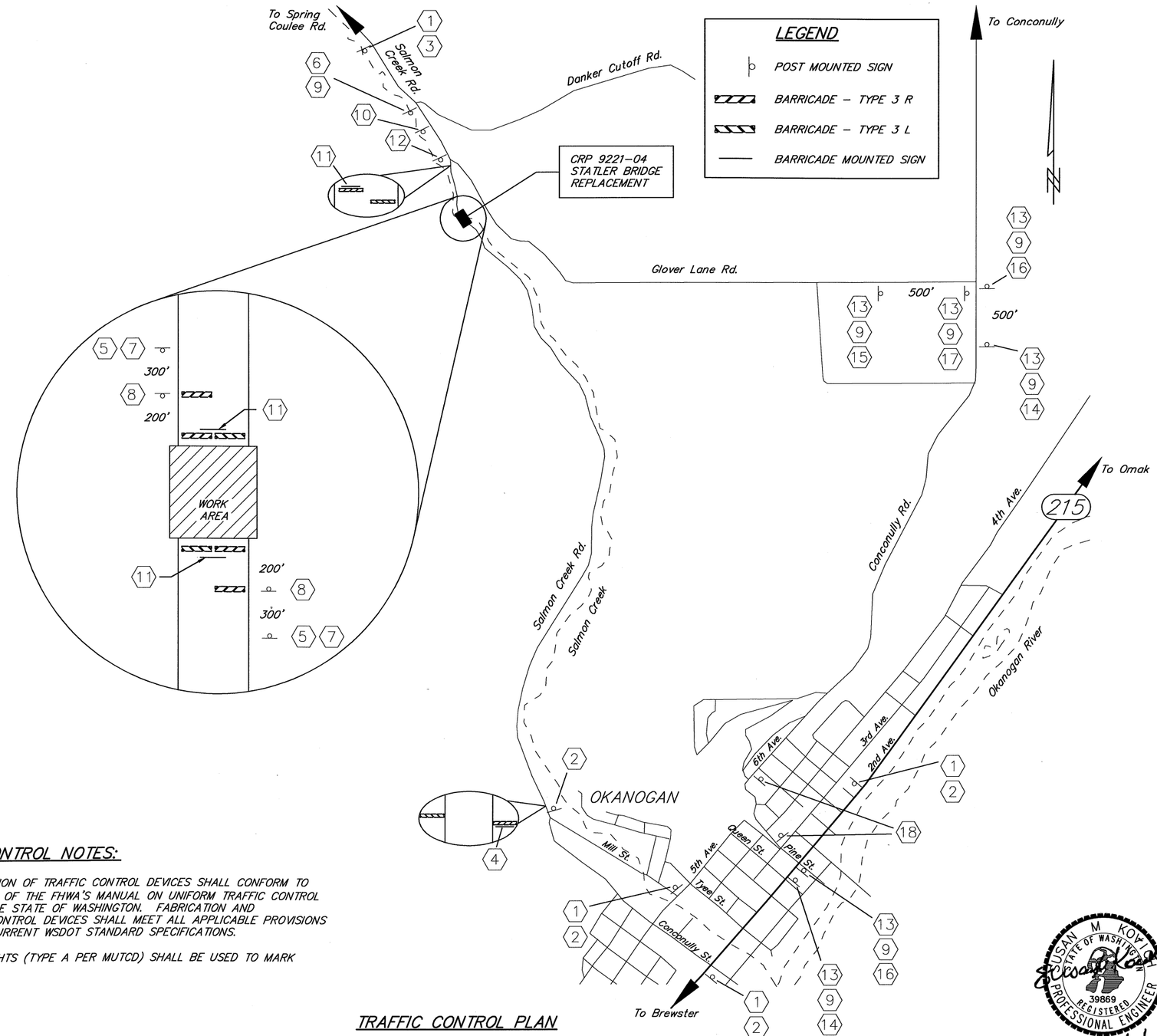

GENERAL TRAFFIC CONTROL NOTES:

1. FABRICATION AND INSTALLATION OF TRAFFIC CONTROL DEVICES SHALL CONFORM TO ALL APPLICABLE PROVISIONS OF THE FHWA'S MANUAL ON UNIFORM TRAFFIC CONTROL DEVICES AS ADOPTED BY THE STATE OF WASHINGTON. FABRICATION AND INSTALLATION OF TRAFFIC CONTROL DEVICES SHALL MEET ALL APPLICABLE PROVISIONS OF SECTION 1–10 OF THE CURRENT WSDOT STANDARD SPECIFICATIONS.
2. TWO FLASHING WARNING LIGHTS (TYPE A PER MUTCD) SHALL BE USED TO MARK EACH BARRICADE.

TRAFFIC CONTROL PLAN

SUSAN M KOVICH
STATE OF WASHINGTON
39869
REGISTERED PROFESSIONAL ENGINEER
7/1/19

Designed by: SMK Date: 4/19	Nicholls Kovich Engineering, PLLC	R.A.P. Project No. 2418–01	Okanogan County Department of Public Works
Drawn by: AVK Date: 4/19	P.O. Box 1050 Veradale WA 99037-1050		1234–A 2nd Ave. S. 509–422–7300
Checked by: SMK Date: 5/19	Phone: (509) 921-6747 Fax: (509) 242-8777	Approved: _____ Approval Date	Okanogan, Washington 98840
Fed. Funct. Class: Minor Collector	E-mail: info@nichollskovich.com		
Terrain Type: Mountainous			
Design Year: 2019			
Design Year ADT.: 497			
Design Speed: 30			

COUNTY ROAD PROJECT NO. 9221–04

TRAFFIC CONTROL PLAN

STATLER BRIDGE REPLACEMENT